# TECHNICAL HANDBOOK MT SYSTEM

**Including technical data according to Eurocode 3 (EN 1993)**
**Version from 03.2023**

## Terms of common cooperation / Legal disclaimer

The product loading capacities published in these Technical Data Sheets are only valid for the mentioned codes or technical data generation methods and the defined application conditions (e.g. ambient temperature load capacity not valid in case of fire, data not valid in support structures when mixed with third party products), assuming sufficient fastener, base material and building structure strength. Additional calculations, checks and releases by the responsible structural engineer might be needed to clarify the capacity of base material and building structure. Suitability of structures combining different products for specific applications needs to be verified by conducting a system design and calculation, using for example Hilti PROFIS software.

In addition, it is crucial to fully respect the Instructions for Use and to assure clean, unaltered and undamaged state of all products at any time in order to achieve this loading capacity (e.g. misuse, modification, overload, corrosion).As products but also technical data generation methodologies evolve over time, technical data might change at any time without prior notice.
We recommend to use the latest technical data sheets published by Hilti.

In any case the suitability of structures combining different products for specific applications need to be checked and cleared by an expert, particularly with regard to compliance with applicable norms and permits, prior to using them for any specific facility. This book only serves as an aid to interpret the suitability of structures combining different products for specific applications without any guarantee as to the absence of errors, the correctness and the relevance of the results or suitability for a specific application. User must take all necessary and reasonable steps to prevent or limit damage. The suitability of structures combining different products for specific applications are only recommendations that need to be confirmed with a professional designer and/or structural engineers to ensure compliance with User`s specific jurisdiction and project requirements.

## Technical Notes



## 1 MT System



## 2 MT Profiles



## 3 MT Brackets



## 4 MT Connectors



## 5 MT Base Material Connectors



## 6 MT Media Fixation



## 7 MT Accessories



## 8 MT Roof Top Application Portfolio



## 9 MT Seismic Bracing Portfolio

# ONE SYSTEM, COUNTLESS SCENARIOS

**Easy to design and simple to assemble, Hilti's MT system is the only answer you'll ever need for virtually all your installation support structures. Whether you are planning MEP installations such as pipe and cable tray supports, or access platforms and integrated floors for energy and industry projects: The versatile and lightweight solution covers almost all loading scenarios and allows for highly efficient installation.**

## DO MORE WITH LESS

Hilti MT is ideally suited for both light utilities such as air ducts and communication cables, as well as for cable trays and heavy cable ladders. It even fits for larger non-critical piping and heavier mechanical equipment.

As a result, planning, managing, and assembling metal framing and support structures is easier than ever. With Hilti MT, you can seamlessly and simply combine all your MEP utilities in a single support structure that has been engineered for optimal efficiency.

The Hilti MT system features cross compatibility and interchangeability, enabling cost-optimized solutions. All components and baseplates complement the range of profiles, ensuring the whole installation can be realized with the same system.

## DESIGN WITH EASE

A large portfolio consisting of trapeze profiles, C-channels (struts), and closed profiles (girders) allows for easy design, even of complex multi-trade support installations. And on top, Hilti MT features direct girderon-girder connectivity as well as direct fixation of profiles to girders. Furthermore, some connectors are compatible with both strut C-channels and closed profiles (girders).

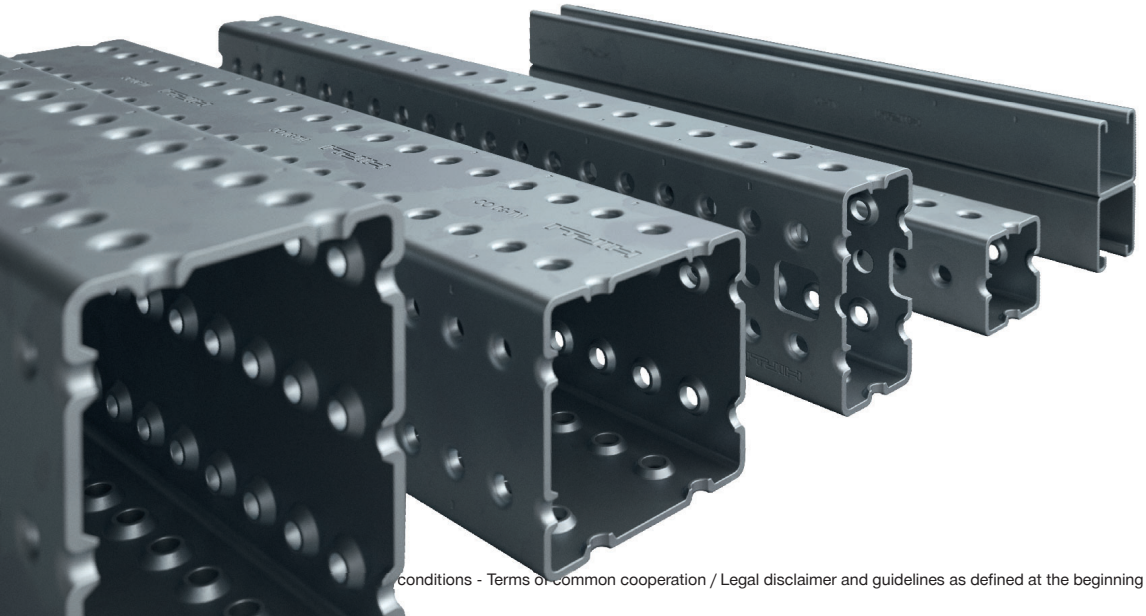

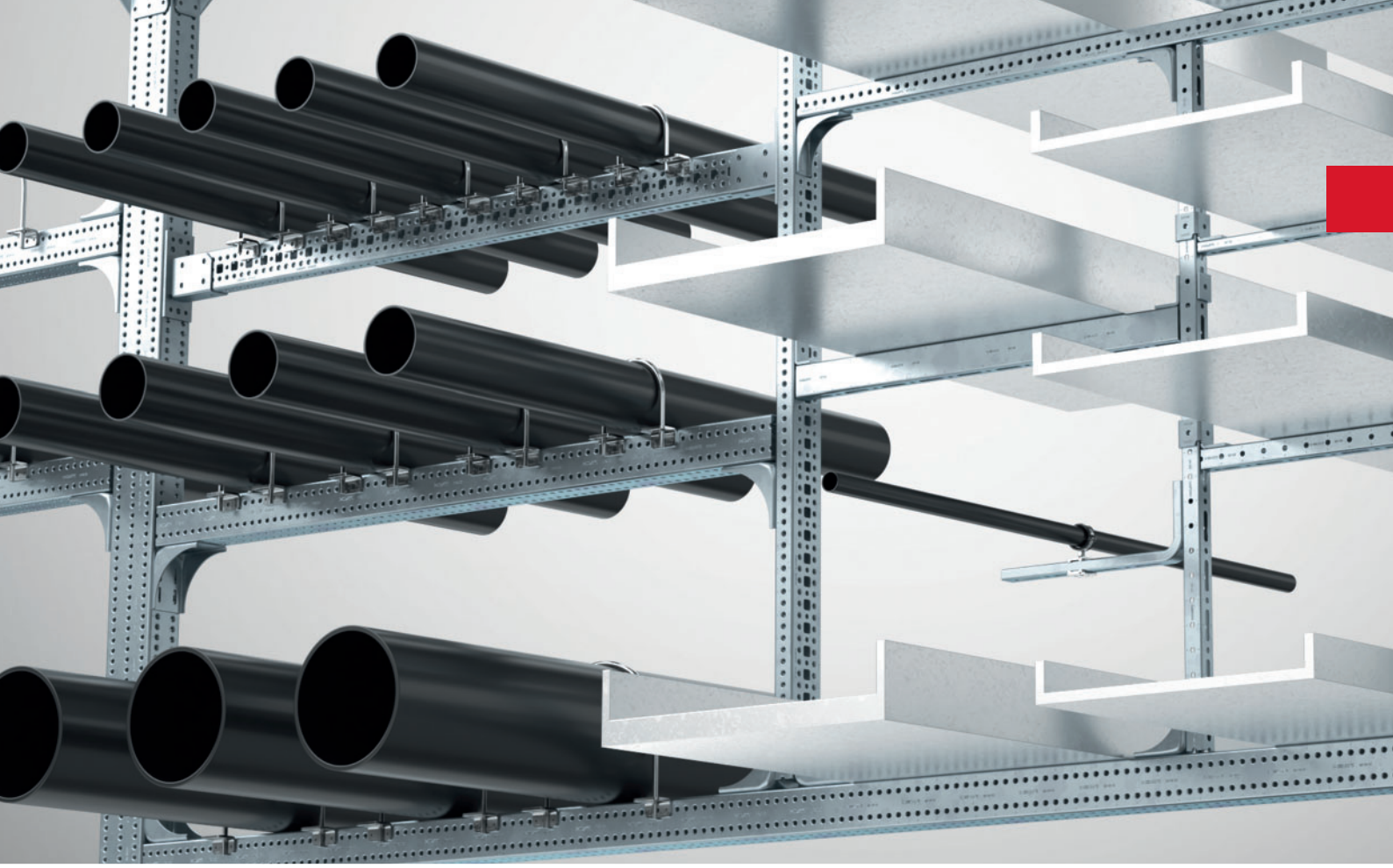

# ALWAYS THE RIGHT ONE

Installation of Hilti MT is intuitive, fast, and safe. It features a simple and robust bolting mechanism to minimize installation errors. All closed profile connections can be fixed with the same single bolt – the Thread Forming Bolt (MT-TFB). A mix-up of wrong bolts in a given fixation combination becomes a thing of the past.

## One-handed

Hilti MT allows for installation with one hand. Access to the reverse side of the structure as well as nuts or complex fixation elements are no longer needed.

## Flexible

Releasing, repositioning, and subsequent retorquing of fixations is fully enabled. This maintains the full flexibility of modular systems.

## Cost-effective

The variety of needed connectors is reduced, which minimizes complexity and cost of stock management. Fixation of elements can be accomplished by just one version of a simple bolt.

## Productive and safe

The Hilti SIW-AT impact wrench with Adaptive Torque System sets bolts consistently and fast with the ideal tightness.

## The essence of simplicity

Hilti MT-TFB Thread Forming Bolts securely connect to closed profiles (girders) without the need for nuts or washers. During installation, a robust thread is formed within the girder dome.
This reduces the risk of thread stripping to a minimum.

# DESIGNED TO PERFORM, AND TO LAST

**Hilti MT provides the latest innovation in strut C-Channel connectivity, making the system as flexible as never before. Moreover, the whole system features cuttingedge corrosion resistance for both indoor and outdoor exposure.**

## SERRATION ON THE SPOT

Hilti MT-TL Twist-Lock channel nuts in effect create their own serration during torquing. This marks the first truly seamless strut C-Channel fixation method with shear capacity.

### Universal

Serration is created on the spot, thus eliminating the need for preformed serrations in the channel. Known restrictions of positioning steps (typically 2 mm) due to serrations become obsolete.

### Adjustable

Releasing, repositioning, and subsequent retorquing of elements fixed with MT-TL remains fully enabled.

### Reliable

Mechanical connection of the MT-TL is realized without reliance on friction, thus providing the required shear capacity for strut C-Channel connections.

### Fast and easy

During installation, connection elements can be intuitively positioned and locked in place.

### Innovative Twist-Lock

Hilti MT-TL channel nuts can be easily installed with a one-handed “twist and lock” in position. A groove is cut into the channel allowing for rapid and highly accurate placement of components.

During installation, Hilti Twist-Locks do not slip before final-torquing and can even be repositioned later.

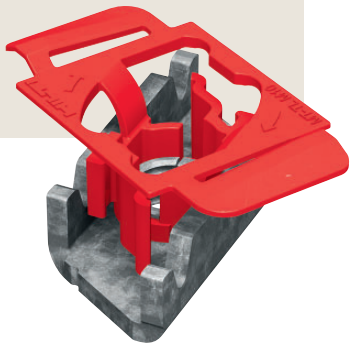

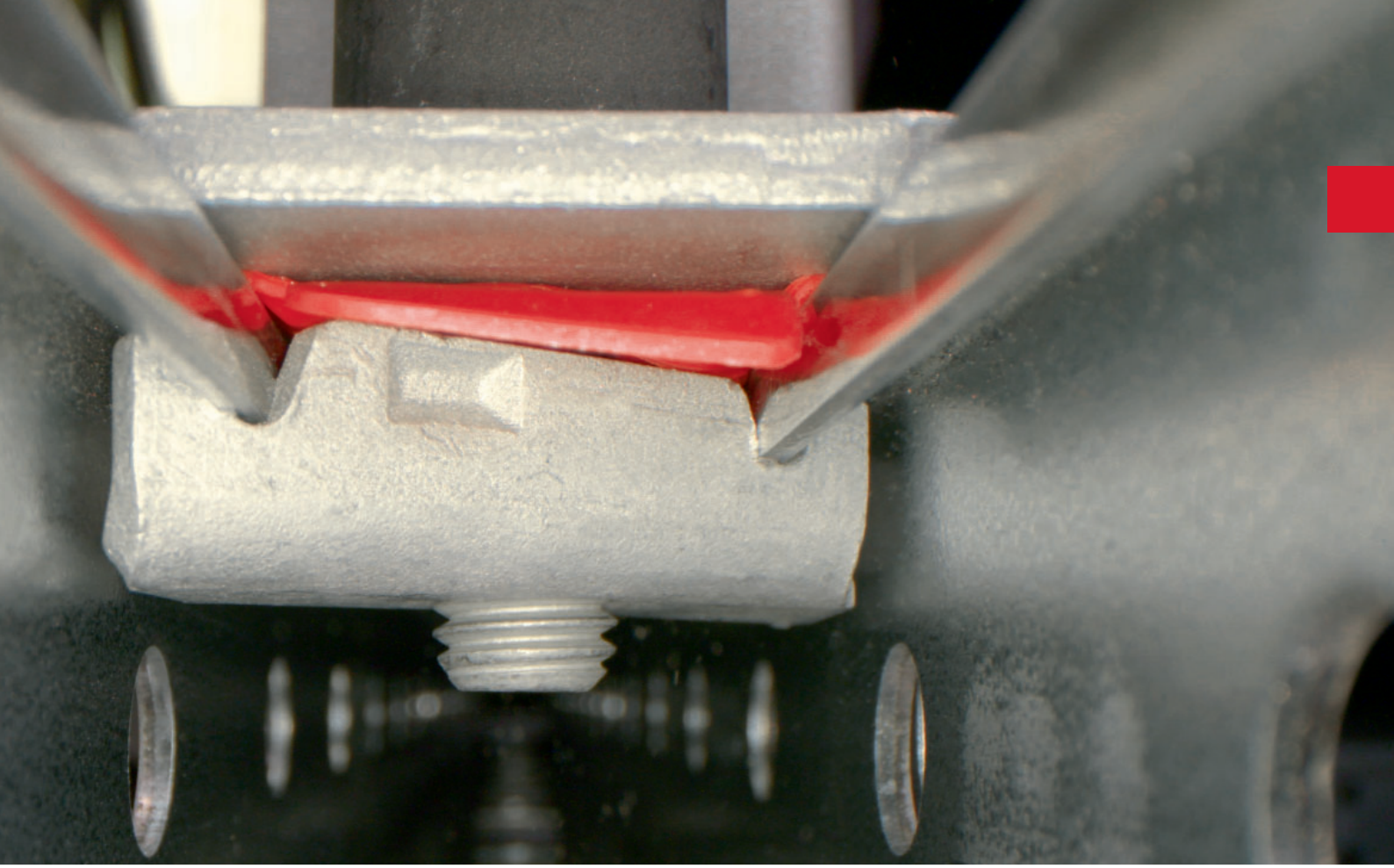

# CORROSION PROTECTION WITHOUT COMPROMISES

The Hilti MT system makes use of the most innovative technologies in corrosion protection and is designed to last in indoor and low to moderate pollution outdoor environmental conditions.

## Right for every condition

For indoor usage, Hilti's established high-quality protection is used: Profiles are sendzimir galvanized, connectors and baseplates are zinc electroplated.

Solutions designed for outdoor use combine hot-dip galvanization for components (such as connectors and baseplates) and zinc-magnesium galvanization (ZM technology) for profiles. ZM profiles conform to the ASTM A1046 and EN 10346 standards.

## Breakthrough coating technology

Zinc Magnesium (ZM) technology represents the leading edge of corrosion protection. It combines robustness and longevity with increased environmental friendliness and optimizes costs.

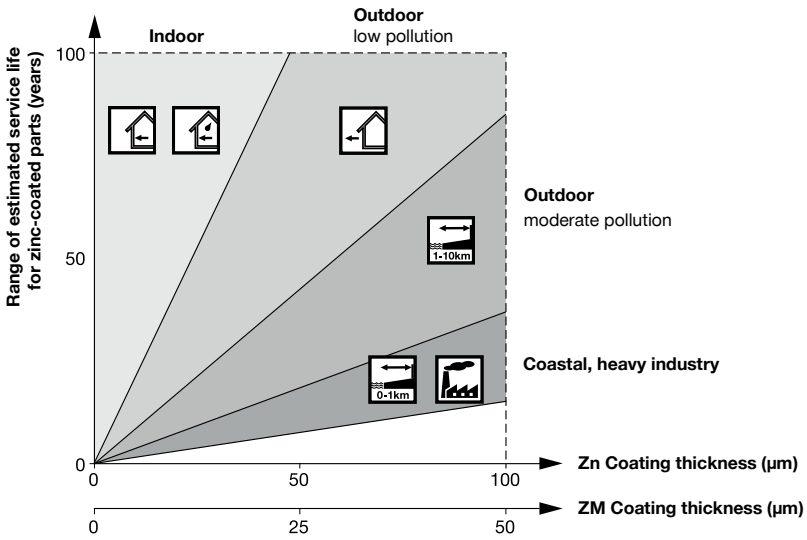

# EVALUATIONS OF TECHNICAL DATA

Technical data herein is based on analytical calculations, finite element analysis or laboratory testing based on the provisions of Eurocodes EN 1990 and EN 1993.

## Analytical Calculations

Analytical calculations for the design of joints as per EN 1993-1-8 are considered for the connector base material as well as bolted and welded connections.

## Finite Element Analysis

In line with EN 1993-1-5, finite element analysis is an established alternative method for obtaining resistance data. Such analyses with shell and/or solid finite element models are performed to derive technical data for connector components contained herein. State-of-the-art software and modelling technics considering geometrical and material non-linearities as per EN 1993-1-5 are applied. The final resistance data herein considers the serviceability limit state (deformation) as well as the ultimate limit state (stress/strain and stability).

## Testing

Structural performance via testing and evaluation is required when the strength of an element, connection, or assembly cannot be determined per the provisions of the Eurocode EN 1993. Moreover, they are performed to calibrate and validate finite element analysis and typically set the basis for connector load data in the most applicaton relevant load directions. The assessment of laboratory tests is following the boundary conditions and statistical rules of EN 1990 Annex D.

# SAFETY CONCEPT

## On design and recommended resistance

- The design resistance of the products ($X_d$) in this document is defined in accordance with EN1993
  - EN1993 partial safety factors for resistance ($\gamma_M$) are included
  - Deformation limit is considered when defining the resistance

- **All the resistances stated in this document are recommended values ($X_r$)**
  - Recommended values are always calculated from the design load via a Hilti concept safety factor ($\gamma_{Hilti}$)

$$X_r = \frac{X_d}{\gamma_{Hilti}}$$

  - $\gamma_{Hilti}$ includes the action partial safety factors, as per EN1990. This is a HILTI concept
  - The value of $\gamma_{Hilti}$ can vary from one part to another. It can be 1.4 or 1.5.

- From the chart below it is noted that the comparison of “Recommended resistance” shall always be made with „Unfactored load*”, and “Design resistance” with “Design load”

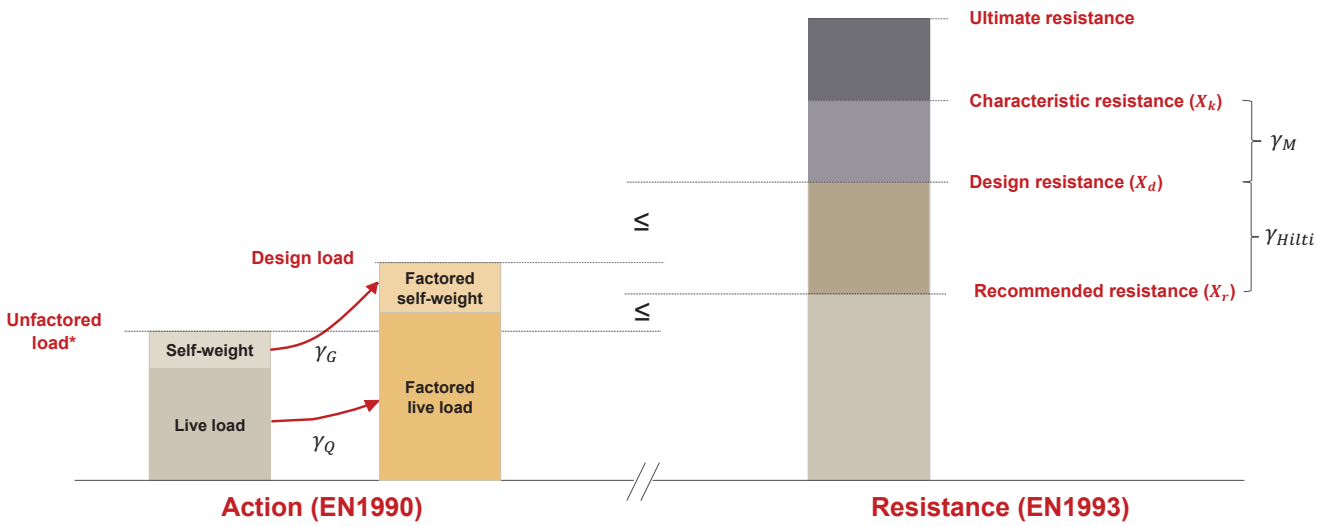


* It is noted that in EN1990 this is defined as «Characteristic load», i.e., the main representative value of a load. To enable an easier understading of Hilti’s safety concept, it is renamed to «Unfactored load» to highlight that it means weight of applied load without partial safety factors applied on top.

# GENERAL INFORMATION TO CORROSION PROTECTION

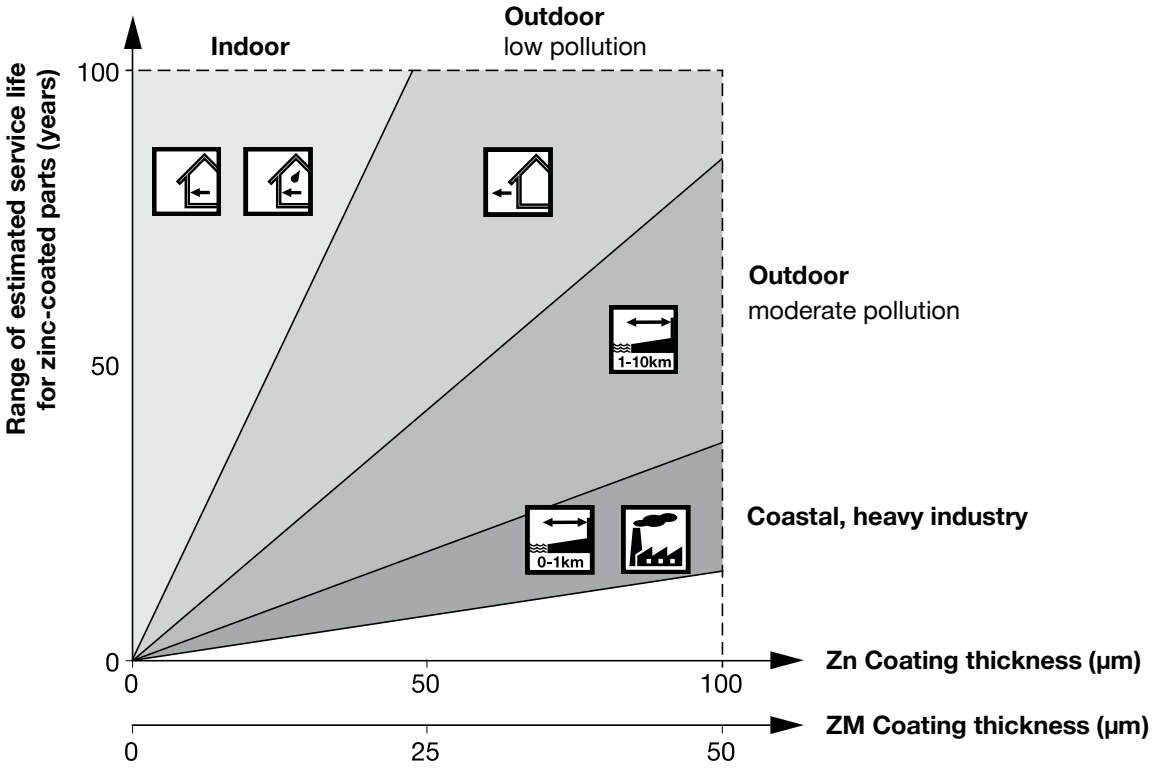


| HILTI CORROSION RESISTANCE | | | |
|---|---|---|---|
| Hilti Corrosion Resistance | INDOOR COATED | OUTDOOR COATED | OUTDOOR PLUS |
| Corrosion class/<br>min. lifetime | C1 > 50 years<br>C2 > 20 years | C3 > 25 years<br>C4 > 15 years | C5 > 15 years<br>(ask expert) |
| Corrosion environment | low-moderate | moderate-high | high-extreme |

Hilti's installation systems are supplied in various coating technologies to meet the requirements in all conditions:

| **Hilti System** | **Indoor coated** | **Outdoor coated** | | **Outdoor Plus** | |
|---|---|---|---|---|---|
| | Zn | HDG Zn | HDG ZM | S A2 | S A4 |
| MT-Profiles | X | | X | | |
| MT-Components | X | X | | | |

The typical lifetime expectancy of Hilti's installation systems is shown in the table below:

| | | Indoor coated | Outdoor coated | | Outdoor Plus | |
|---|---|---|---|---|---|---|
| **Installation systems** | **Channel system** | MT, MQ, MM, MC | MT-OC, MQ-F, MQ ASTM, MC-OC, MI, MIQ | | MQ system stainless A2/ AISI 304 | MQ system stainless A4/ AISI 316 |
| | **Pipe fastening** | Indoor pipe rings[1] | HDG pipe rings[2] | MI-UB, MI-PS | Stainless pipe rings[3] | |
| **Environmental conditions** | | **lifetime (in years)** | | | | |
| Dry indoor | | 50–100 | 100 | | ■ | ■ |
| Indoor with temporary condensation | | 25–70 | 50–100 | | ■ | ■ |
| Outdoor with low pollution | | 5–10 | 25–70 | | ■ | ■ |
| Outdoor with moderate concentration of pollutants (1-10km) | | – | 15–40 | | ■ | ■ |
| Coastal areas (0-1km) | | – | 5–20 | | – | ■ |
| Outdoor, areas with heavy industrial pollution | | – | 5–20 | | – | ■ |
| Close proximity to roads | | – | – | | – | ■ |
| Special applications | | **Consult experts** | | | | |

■ = expected lifetime of an installation system made from this material is typically satisfactory in the specified environment based on the typically expected lifetime of a building.

1) Indoor pipe rings: MP-H, MP-HI, MP-LH, MP-LHI, MPN, MP-MI, MP-MIS, MP-M, MP-MXI, MP-MX, MP-PI, SDC, MP-SP

2) HDG pipe rings: MP-MI-F, MP-M-F, MP-MXI-F, MP-MX-F

3) Stainless pipe rings: MP-SRN, MP-SRNI, MP-MR, MP-MRI, MP-MRXI

1

# MT-TL Twist-Lock Channel Nut

**Nut for attaching media to MT open C-channels (struts)**

## Applications

- Connecting all compatible hardware to MT strut channels
- Assembling shear-resistant metal framing for MEP support structures using MT strut channels (M10 version only)
- Suitable for use in dry, indoor environments

## Advantages

- Part of the Hilti MT system – an economical, all-in-one solution for virtually all modular MEP support structures
- High shear and pull-out resistance provided by a reliable mechanical fixation to the channel flanges
- Easy to install – insert into strut channel using a one-handed “push-and-twist” motion
- Adaptable – unlike welding, Twist-Locks allow you to modify strut channel framing during installation and for future MEP requirements
- Compatible with MT System strut channels – no need for serrations on the channel flanges
- Compatible with the Hilti Adaptive Torque system – use a cordless impact wrench to quickly tighten nuts to the correct pretension (compatible tool and SI-AT module required)

## MT-TL Twist-Lock Channel Nut M6 / M8 / M10 / M12 / M16 / 1/2 / 3/8

| Order Designation | Technical data | Sales pack quantity | Item number | |
|---|---|---|---|---|
| **MT-TL M6** | Dry indoor conditions (C1) Indoor with temporary condensation (C2) | 50 pc | **2343283** | 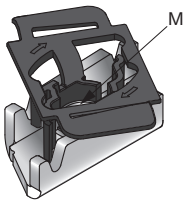  |
| **MT-TL M8** | | 30 pc | **2273630** | |
| **MT-TL M10** | | 30 pc | **2272080** | |
| **MT-TL M12** | | 30 pc | **2273632** | |
| **MT-TL M16** | | 30 pc | **2273634** | |
| **MT-TL 1/2** | | 30 pc | **2273638** | |
| **MT-TL 3/8** | | 50 pc | **2273636** | |

# MT-TL OC Twist-Lock Channel Nut

**Nut for attaching media to open C-channel (struts) - outdoor**

## Applications

- Connecting all compatible hardware to MT strut channels
- Assembling shear-resistant metal framing for MEP support structures using MT strut channels (M10 version only)
- Suitable for use in moderately corrosive environments

## Advantages

- Part of the Hilti MT system – an economical, all-in-one solution for virtually all modular MEP support structures
- High shear and pull-out resistance provided by a reliable mechanical fixation to the channel flanges
- Easy to install – insert into strut channel using a one-handed “push-and-twist” motion
- Adaptable – unlike welding, Twist-Locks allow you to modify strut channel framing during installation and for future MEP requirements
- Compatible with MT System strut channels – no need for serrations on the channel flanges
- Compatible with the Hilti Adaptive Torque system – use a cordless impact wrench to quickly tighten nuts to the correct pretension (compatible tool and SI-AT module required)

## MT-TL Twist-Lock Channel Nut - Outdoor M6 / M8 / M10 / M12 / M16 / 1/2 / 3/8 OC

| Order Designation | Technical data | Sales pack quantity | Item number | |
|---|---|---|---|---|
| **MT-TL M6 OC** | Outdoor, low to moderate pollution (C3 / C4 - low) | 50 pc | **2343284** | 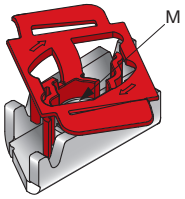  |
| **MT-TL M8 OC** | | 30 pc | **2273631** | |
| **MT-TL M10 OC** | | 30 pc | **2272082** | |
| **MT-TL M12 OC** | | 30 pc | **2273633** | |
| **MT-TL M16 OC** | | 30 pc | **2273635** | |
| **MT-TL 1/2 OC** | | 30 pc | **2273639** | |
| **MT-TL 3/8 OC** | | 50 pc | **2273637** | |

# MT-TL Twist-Lock Channel Nut

1

## Operation instruction

MT-TL M8 / MT-TL M8 OC / MT-TL ⅜" / MT-TL ⅜“ OC / MT-TL M10 / MT-TL M10 OC

2311342-07.2022

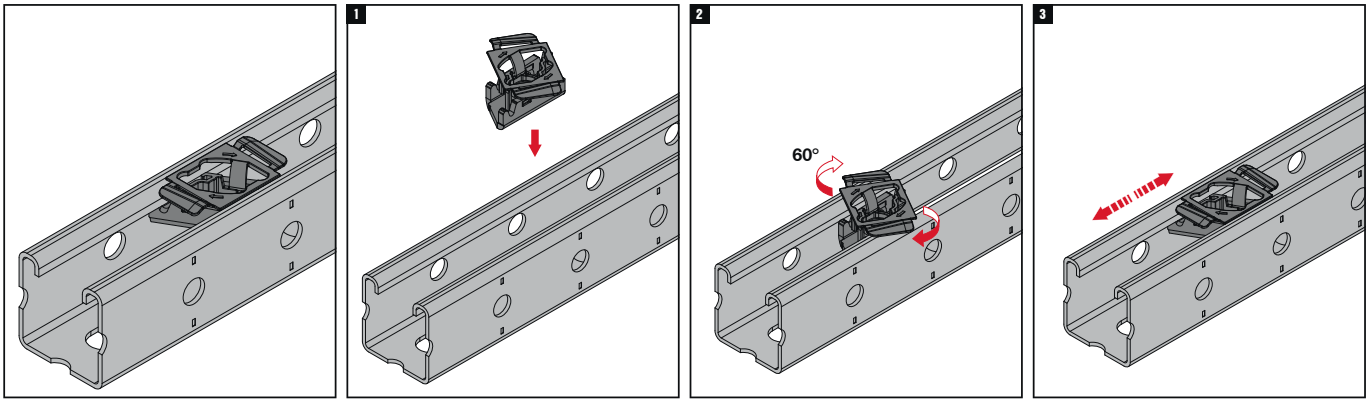


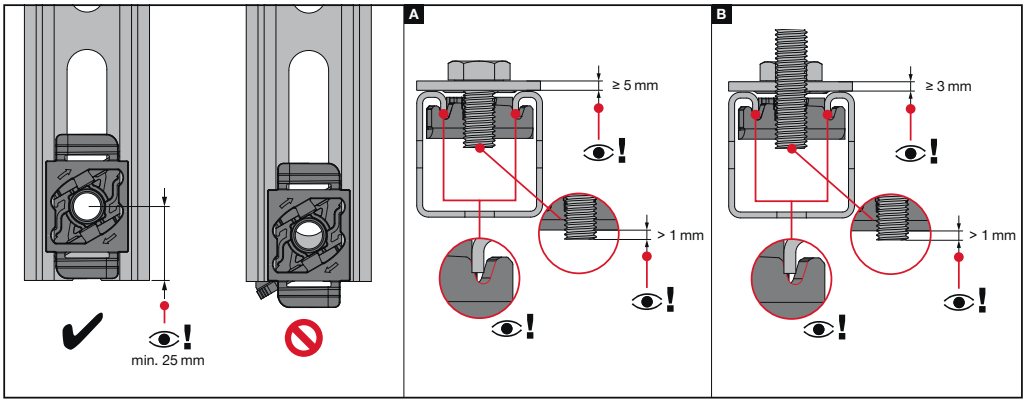


| | A SW 8.8 | B |
|---|---|---|
| MT-TL M8 | 30 Nm | 10 Nm |
| MT-TL M8 OC | | |
| MT-TL 3/8" | 40 Nm (30 ft-lb) | 20 Nm (15 ft-lb) |
| MT-TL 3/8" OC | | |
| MT-TL M10 | 30 Nm | 15 Nm |
| MT-TL M10 OC | 40 Nm | 25 Nm |

The latest IFU (Instruction For Use) is available on Hilti Online. Please check for any revisions before installing the product.

## MT-TL M10 / MT-ML M10 OC

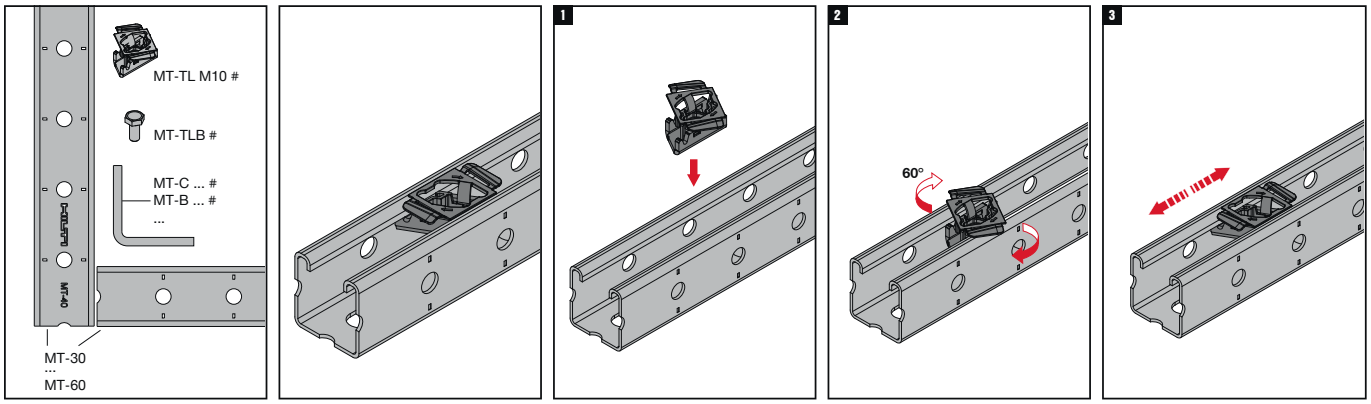


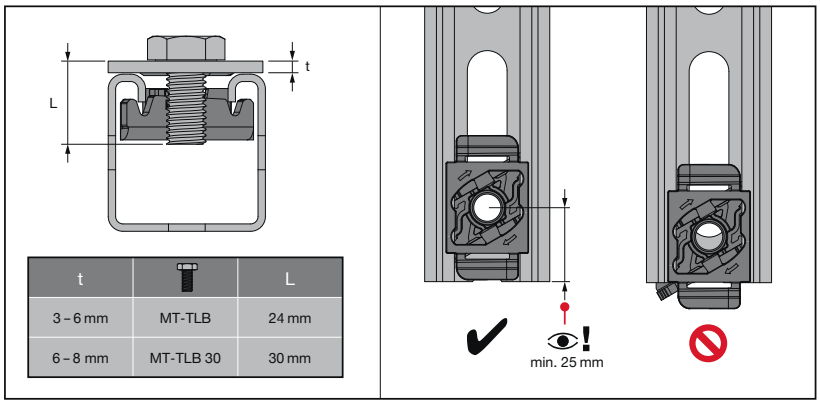


| t | | L |
|---|---|---|
| 3 – 6 mm | MT-TLB | 24 mm |
| 6 – 8 mm | MT-TLB 30 | 30 mm |

| | MT-TLB / MT-TLB 30 | |
|---|---|---|
| MT-TL M10 | 30 Nm (22 ft-lb) | SI-AT-A22 SI-AT-22 |

| | MT-TLB OC / MT-TLB 30 OC | |
|---|---|---|
| MT-TL M10 OC | 40 Nm (30 ft-lb) | SI-AT-A22 SI-AT-22 |

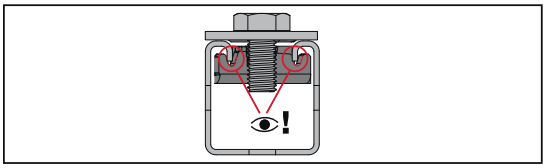

The latest IFU (Instruction For Use) is available on Hilti Online. Please check for any revisions before installing the product.

# MT-TL Twist-Lock Channel Nut

## Operation instruction

MT-TL M6 / MT-TL M6 OC

2350093-11.2021

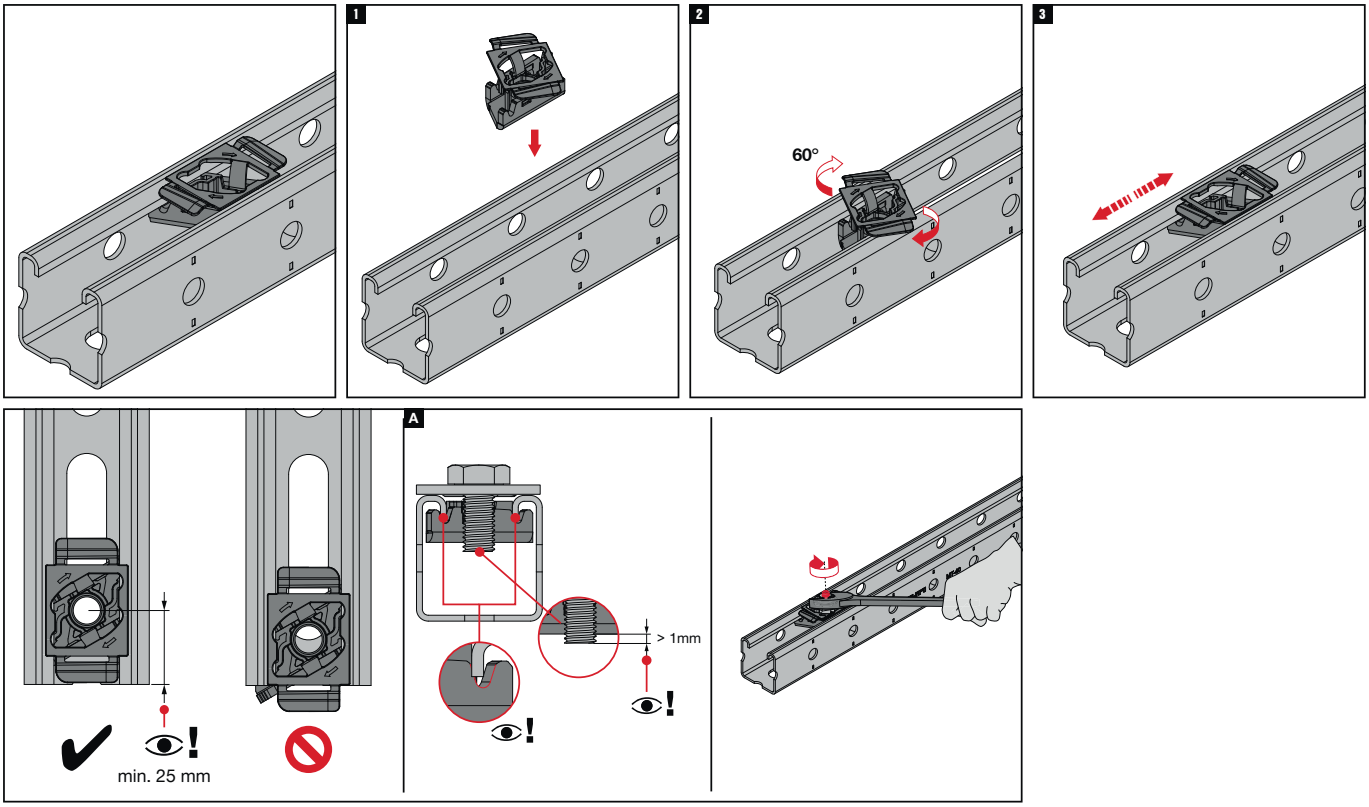


The latest IFU (Instruction For Use) is available on Hilti Online. Please check for any revisions before installing the product.

## MT-TL M12 OC / MT-TL M16 OC / MT-TL M½" OC

2298187-06.2021

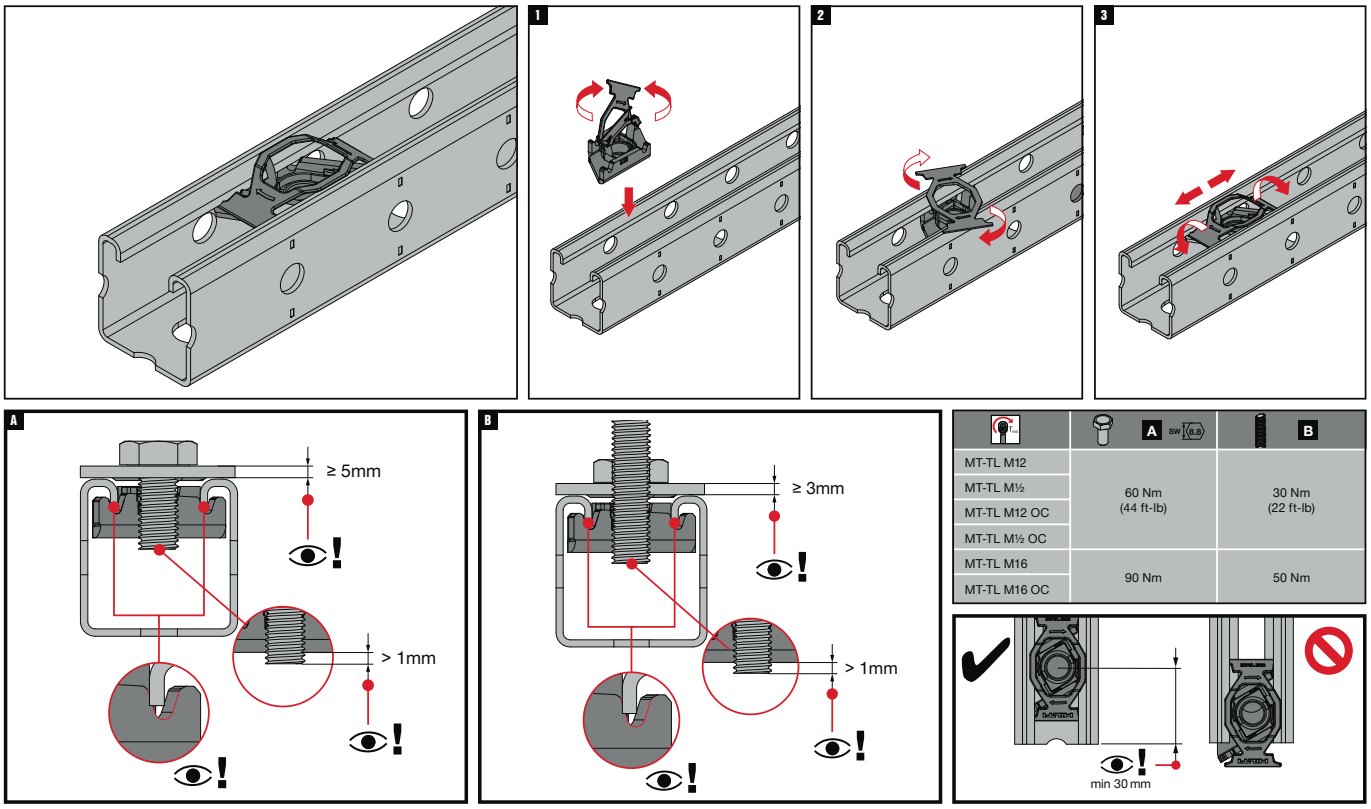


| | A | B |
|---|---|---|
| MT-TL M12 | 60 Nm (44 ft-lb) | 30 Nm (22 ft-lb) |
| MT-TL M½ | | |
| MT-TL M12 OC | | |
| MT-TL M½ OC | | |
| MT-TL M16 | 90 Nm | 50 Nm |
| MT-TL M16 OC | | |

The latest IFU (Instruction For Use) is available on Hilti Online. Please check for any revisions before installing the product.

1

## MT-TLB Twist-Lock Bolt

Hexagon-head bolt for use with Twist-Locks when assembling open C-channel (strut) structures

### Advantages

- Easy to install – compatible with the Hilti MT Twist-Lock, a faster alternative to spring nuts for assembling a modular support system
- Compatible with the Hilti Adaptive Torque system – use a cordless impact wrench to quickly tighten bolts to the correct pretension (compatible tool and SI-AT module required)

### Applications

- Connecting all compatible hardware to MT C-channel (strut)
- Assembling shear-resistant metal framing for MEP support structures using MT strut channels
- Suitable for use in dry, indoor environments

### Technical data

| | |
|---|---|
| **Material composition** | ISO 898-1 8.8 |
| **Surface finish** | Indoor Coated - Electro Galvanized |

### MT-TLB Twist-Lock Bolt

| Order Designation | Technical data | Sales pack quantity | Item number | |
|---|---|---|---|---|
| **MT-TLB** | Dry indoor conditions (C1) Indoor with temporary condensa-tion (C2) | 200 pc | **2273254** | 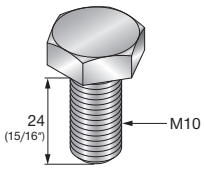  |

# MT-TLB OC Twist-Lock Bolt - Outdoor

Hexagon bolt for use with Twist-Locks when assembling open C-channel (strut) structures (struts) for outdoor use with low pollution

## Advantages

- Easy to install – compatible with the Hilti MT Twist-Lock, a faster alternative to spring nuts for assembling a modular support system
- Compatible with the Hilti Adaptive Torque system – use a cordless impact wrench to quickly tighten bolts to the correct pretension (compatible tool and SI-AT module required)

## Applications

- Connecting all compatible hardware to MT C-channel (strut)
- Assembling shear-resistant metal framing for MEP support structures using MT strut channels
- Suitable for use in moderately corrosive environments

## Technical data

| | |
|---|---|
| **Material composition** | ISO 898-1 8.8 |
| **Surface finish** | Multi-layer coating, designed for corrosion environment category C3 according ISO 9223 |

## MT-TLB OC Twist-Lock Bolt - Outdoor

| Order Designation | Technical data | Sales pack quantity | Item number | |
|---|---|---|---|---|
| **MT-TLB OC** | Outdoor, low to moderate pollution (C3 / C4 - low) | 200 pc | **2273256** | 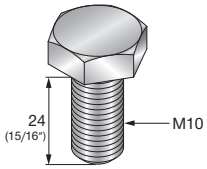  |

# MT-TFB OC Thread Forming Bolt

Thread-forming bolt for use when assembling MT closed profile structures

## Applications

- Connecting all compatible hardware to MT closed profiles
- Assembling metal framing for MEP support structures by fixing compatible MT connectors
- Direct attachment of MT profiles and channels to MT closed profiles, or any MT closed profile to MT-80

## Advantages

- Part of the Hilti MT system – an economical, all-in-one solution for virtually all modular MEP support structures
- One-step installation – no nut required
- Compatible with the Hilti Adaptive Torque system – use a cordless impact wrench to quickly tighten bolts to the correct pretension (compatible tool and SI-AT module required)
- Versatile – suitable for all MT girders and connection hardware

## Technical data

| | |
|---|---|
| **Material composition** | High Strength Steel |
| **Surface finish** | Outdoor Coated - Multilayer |

## MT-TFB OC Thread Forming Bolt - Outdoor

| Order Designation | Technical data | Sales pack quantity | Item number | |
|---|---|---|---|---|
| **MT-TFB OC** | Outdoor, low to moderate pollution (C3 / C4 - low) | 250 pc | **2272084** | 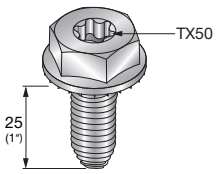  |

# MT Trapeze Profiles

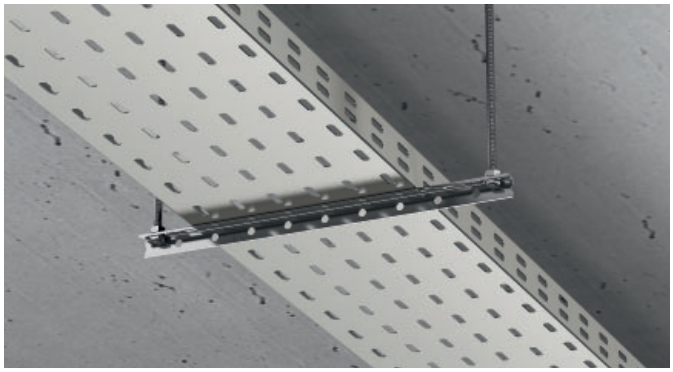

## Applications

- Strut trapeze to support pipes, ducts and cable trays in dry, indoor environments
- Suitable for use in dry, indoor environments

## Advantages

- Economical – high load/weight ratio and rapid assembly make MT trapeze profile a more efficient alternative to welded MEP support structures
- Complexity kept to the minimum – optimizing logistical and on-site operations, as well as providing simplicity in installation
- Economical solution for simple threaded rod trapeze frames
- Fully compatible with the MT System – direct mounting on MT girders possible

## Technical data

| | |
|---|---|
| **Material composition** | S280GD or better steel |
| **Surface finish** | Indoor Coated - Pre-galvanized (Z275) |

## MT-10 Trapeze Profile

| Order Designation | Technical data | Sales pack quantity | Item number | |
|---|---|---|---|---|
| **MT-10** | Dry indoor conditions (C1) Indoor with temporary condensation (C2) | 1x 2 m | **2268492** | 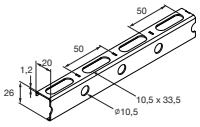  |
| **MT-10 S** | | 1x 3 m | **2360728** | |

## MT-15 Trapeze Profile

| Order Designation | Technical data | Sales pack quantity | Item number | |
|---|---|---|---|---|
| **MT-15** | Dry indoor conditions (C1) Indoor with temporary condensation (C2) | 1x 2 m | **2268493** | 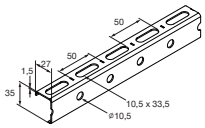  |
| **MT-15 S** | | 1x 3 m | **2360729** | |

2

## MT-20 Trapeze Profile

| Order Designation | Technical data | Sales package quantity | Item number | |
|---|---|---|---|---|
| **MT-20** | Dry indoor conditions (C1) Indoor with temporary condensation (C2) | 1x 2 m | **2268495** | 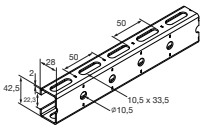 |
| **MT-20 S** | | 1x 3m | **2360921** | |

## MT-40 T Trapeze Profile

| Order Designation | Technical data | Sales package quantity | Item number | |
|---|---|---|---|---|
| **MT-40 T S** | Dry indoor conditions (C1) Indoor with temporary condensation (C2) | 1x 3 m | **2360923** | 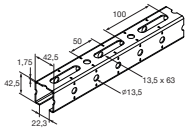 |
| **MT-40 T** | | 1x 6 m | **2268502** | |

# MT Trapeze Profiles - Outdoor

## Applications

- Strut trapeze to support pipes, ducts and cable trays
- Suitable for use in moderately corrosive environments

## Advantages

- Economical – high load/weight ratio and rapid assembly make MT strut channel a more efficient alternative to welded MEP support structures
- Complexity kept to the minimum – optimizing logistical and on-site operations, as well as providing simplicity in installation
- Economical solution for threaded rod trapeze frames

## Technical data

| | |
|---|---|
| **Material composition** | S280GD or better |
| **Surface finish** | Zinc-Magnesium (ZM310)- for outdoor use |

## MT-15 OC Trapeze Profile - Outdoor

| Order Designations | Technical data | Sales pack quantity | Item number | |
|---|---|---|---|---|
| **MT-15 OC** | Outdoor, low to moderate pollution (C3 / C4 - low) | 1x 2 m | **2268494** | 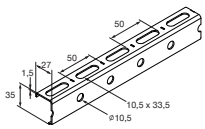  |
| **MT-15 S OC** | | 1x 3m | **2360920** | |

## MT-20 OC Trapeze Profile - Outdoor

| Order Designation | Technical data | Sales pack quantity | Item number | |
|---|---|---|---|---|
| **MT-20 OC** | Outdoor, low to moderate pollution (C3 / C4 - low) | 1x 2 m | **2268496** | 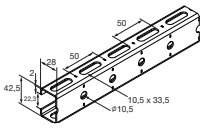  |
| **MT-20 S OC** | | 1x 3 m | **2360922** | |

## MT-40 T OC Trapeze Profile - Outdoor

| Order Designation | Technical data | Sales pack quantity | Item number | |
|---|---|---|---|---|
| **MT-40 T S OC** | Outdoor, low to moderate pollution (C3 / C4 - low) | 1x 3 m | **2360924** | 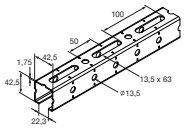  |
| **MT-40 T OC** | | 1x 6 m | **2268504** | |

# MT Open C-channels (Struts)

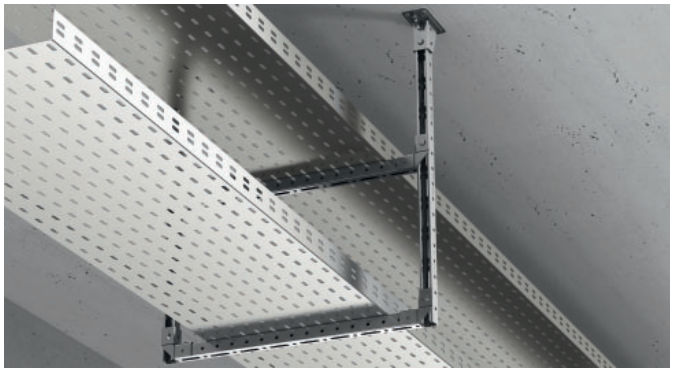

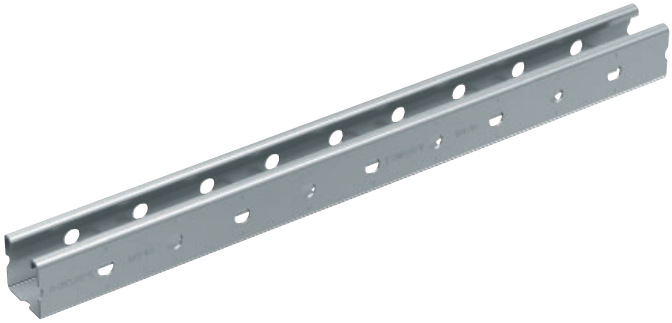

## Applications

- Floor-mounted MEP support structures with lighter loads and limited spans, such as goal post-type strut framing
- Ceiling-mounted MEP support structures with lighter loads and limited spans, such as suspended strut trapeze frames
- Wall-mounted cantilever brackets for smaller pipes, ducts and cables

## Technical data

| | |
|---|---|
| **Material composition** | S280GD or better steel |
| **Surface finish** | Indoor Coated - Pre-galvanized (Z275) |

## Advantages

- Economical – high load/weight ratio and rapid assembly make MT strut channel a more efficient alternative to welded MEP support structures
- Complexity kept to the minimum – optimizing logistical and on-site operations, as well as providing simplicity in installation
- Simpler to design – you can use Hilti MT components for all MEP installations from the lightest trapeze to the heaviest-duty modular framing
- Simpler to install – compatible with the innovative MT System Twist-Lock, enabling the use of a wide range of MT connectors and baseplates

## MT-30 Open C-channel (Strut)

| Order Designation | Technical data | Sales pack quantity | Item number | |
|---|---|---|---|---|
| **MT-30 S** | Dry indoor conditions (C1) Indoor with temporary condensation (C2) | 1x 3 m | **2268497** | 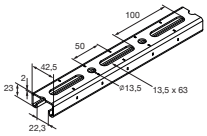  |
| **MT-30** | | 1x 6 m | **2268498** | |

# MT Open C-channels (Struts)

## MT-40 Open C-channel (Strut)

| Order Designation | Technical data | Sales pack quantity | Item number | |
|---|---|---|---|---|
| **MT-40 S** | Dry indoor conditions (C1) Indoor with temporary condensation (C2) | 1x 3 m | **2268505** | 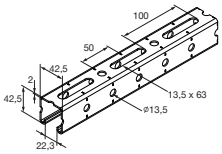 |
| **MT-40** | | 1x 6 m | **2268506** | |

## MT-50 Open Channel (Strut)

| Order Designation | Technical data | Sales pack quantity | Item number | |
|---|---|---|---|---|
| **MT-50 S** | Dry indoor conditions (C1) Indoor with temporary condensation (C2) | 1x 3 m | **2268509** | 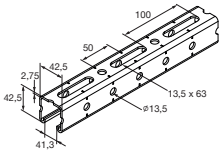 |
| **MT-50** | | 1x 6 m | **2268510** | |

## MT-60 Open C-channel (Strut)

| Order Designation | Technical data | Sales pack quantity | Item number | |
|---|---|---|---|---|
| **MT-60 S** | Dry indoor conditions (C1) Indoor with temporary condensation (C2) | 1x 3 m | **2268513** | 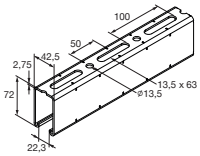 |
| **MT-60** | | 1x 6 m | **2268514** | |

# MT Open C-channels (Struts) - Outdoor



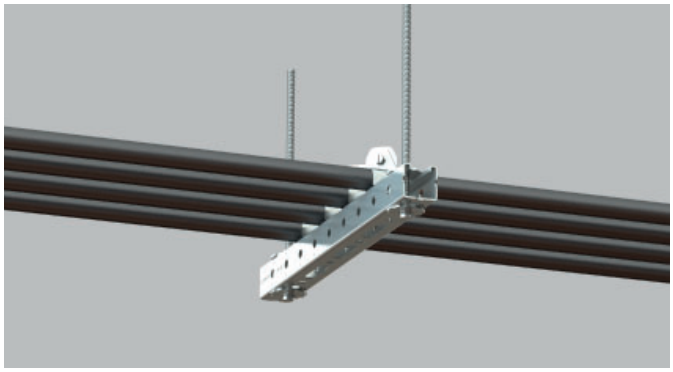

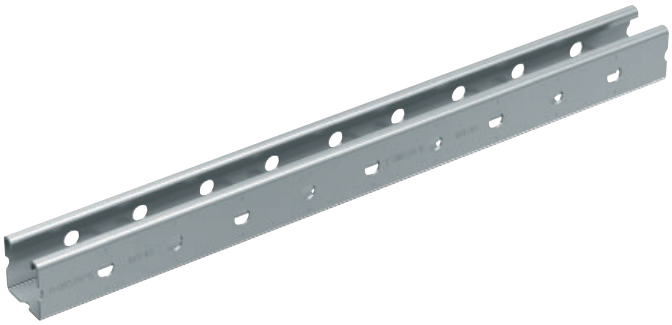

## Applications

- Floor-mounted MEP support structures with lighter loads and limited spans, such as goal post-type strut framing
- Ceiling-mounted MEP support structures with lighter loads and limited spans, such as suspended strut trapeze frames
- Wall-mounted cantilever brackets for smaller pipes, ducts and cables

## Advantages

- Economical – high load/weight ratio and rapid assembly make MT strut channel a more efficient alternative to welded MEP support structures
- Complexity kept to the minimum – optimizing logistical and on-site operations, as well as providing simplicity in installation
- Simpler to design – you can use Hilti MT components for all MEP installations from the lightest trapeze to the heaviest-duty modular framing
- Simpler to install – compatible with the innovative MT System Twist-Lock, enabling the use of a wide range of MT connectors and baseplates

## Technical data

| | |
|---|---|
| **Material composition** | S280GD or better steel |
| **Surface finish** | Zinc-Magnesium (ZM310)- for outdoor use |

## MT-30 Open C-channel (Strut) - Outdoor

| Order Designation | Technical data | Sales pack quantity | Item number | |
|---|---|---|---|---|
| **MT-30 S OC** | Outdoor, low to moderate pollution (C3 / C4 - low) | 1x 3 m | **2268499** | 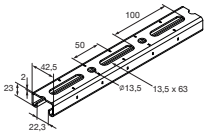  |
| **MT-30 OC** | | 1x 6 m | **2268500** | |

# MT Open C-channels (Struts) - Outdoor

## MT-40 Open C-channel (Strut) - Outdoor

| Order Designation | Technical data | Sales pack quantity | Item number | |
|---|---|---|---|---|
| **MT-40 S OC** | Outdoor, low to moderate pollution (C3 / C4 - low) | 1x 3 m | **2268507** | 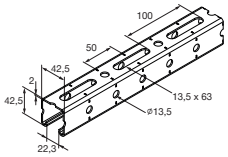  |
| **MT-40 OC** | | 1x 6 m | **2268508** | |

## MT-50 Open C-channel (Strut) - Outdoor

| Order Designation | Technical data | Sales pack quantity | Item number | |
|---|---|---|---|---|
| **MT-50 S OC** | Outdoor, low to moderate pollution (C3 / C4 - low) | 1x 3 m | **2268511** | 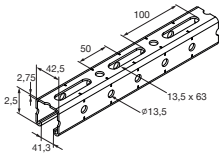  |
| **MT-50 OC** | | 1x 6 m | **2268512** | |

## MT-60 Open C-channel (Strut) - Outdoor

| Order Designation | Technical data | Sales pack quantity | Item number | |
|---|---|---|---|---|
| **MT-60 S OC** | Outdoor, low to moderate pollution (C3 / C4 - low) | 1x 3 m | **2268515** | 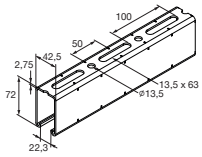  |
| **MT-60 OC** | | 1x 6 m | **2268516** | |

# MT Double C-channel (B2B Strut)

## Applications

- Floor-mounted MEP support structures, such as goal post-type strut framing
- Ceiling-mounted MEP support structures, such as suspended strut trapeze frames
- Wall-mounted cantilever brackets for heavier pipes

## Advantages

- Economical – high load/weight ratio and rapid assembly make MT strut channel a more efficient alternative to welded MEP support structures
- Complexity kept to the minimum – optimizing logistical and on-site operations, as well as providing simplicity in installation
- Simpler to design – you can use Hilti MT components for all MEP installations from the lightest trapeze to the heaviest-duty modular framing
- Simpler to install – compatible with the innovative MT System Twist-Lock, enabling the use of a wide range of MT connectors and baseplates

## Technical data

| | |
|---|---|
| **Material composition** | S280 or better steel |
| **Surface finish** | Indoor Coated - Pre-galvanized (Z275) |

## MT Double C-channel (B2B Strut)

| Order Designation | Technical data | Sales pack quantity | Item number | |
|---|---|---|---|---|
| **MT-40D S** | Dry indoor conditions (C1) Indoor with temporary condensation (C2) | 1x 3 m | **2268517** | 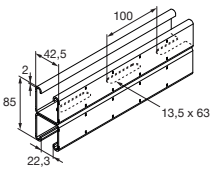  |
| **MT-40D** | | 1x 6 m | **2268518** | |

# MT Open Double C-channel (B2B Strut) - Outdoor

## Applications

- Floor-mounted MEP support structures, such as goal post-type strut framing
- Ceiling-mounted MEP support structures, such as suspended strut trapeze frames
- Wall-mounted cantilever brackets for heavier pipes

## Technical data

| | |
|---|---|
| **Material composition** | S280 or better steel |
| **Surface finish** | Zinc-Magnesium (ZM310) - for outdoor use |

## Advantages

- Economical – high load/weight ratio and rapid assembly make MT strut channel a more efficient alternative to welded MEP support structures
- Complexity kept to the minimum – optimizing logistical and on-site operations, as well as providing simplicity in installation
- Simpler to design – you can use Hilti MT components for all MEP installations from the lightest trapeze to the heaviest-duty modular framing
- Simpler to install – compatible with the innovative MT System Twist-Lock, enabling the use of a wide range of MT connectors and baseplates

## MT-40 Open Double C-channel (B2B Strut) - Outdoor

| Order Designation | Technical data | Sales pack quantity | Item number | |
|---|---|---|---|---|
| **MT-40D S OC** | Outdoor, low to moderate pollution (C3 / C4 - low) | 1x 3 m | **2268519** | 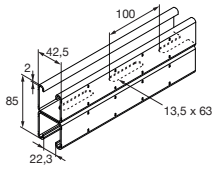  |
| **MT-40D OC** | | 1x 6 m | **2268520** | |

# MT Closed Profiles - Outdoor

2

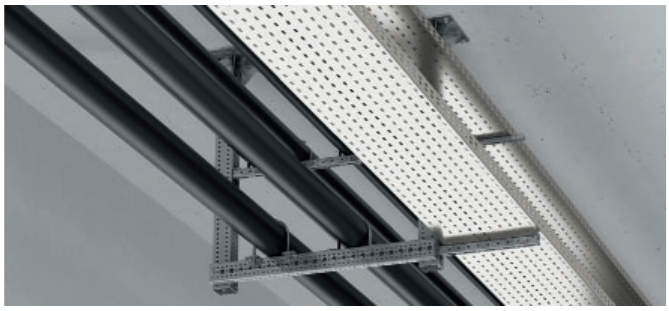

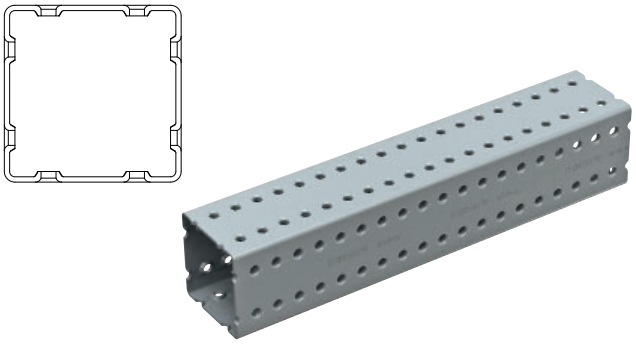

## Applications

- Floor-mounted MEP support structures, such as goal post-type strut framing
- Ceiling-mounted MEP support structures, such as suspended strut trapeze frames
- Wall-mounted cantilever brackets for heavier pipes

## Advantages

- Economical – high load/weight ratio make MT closed profiles an efficient alternative to welding for virtually any heavy-duty MEP supports and modular structures
- Complexity kept to the minimum – optimizing logistical and on-site operations, as well as providing simplicity in installation
- Simpler to design – you can use Hilti MT components for all MEP installations from the lightest trapeze to the heaviest-duty modular framing
- Simpler to install – compatible with the innovative MT thread-forming bolt, enabling the use of a wide range of MT connectors and baseplates, and avoiding the need for nuts

## Technical data

| | |
|---|---|
| **Material composition** | S350 or better steel |
| **Surface finish** | Zinc-Magnesium (ZM310) for outdoor use |

## MT-70 Closed Profile - Outdoor

| Order Designation | Technical data | Sales pack quantity | Item number | |
|---|---|---|---|---|
| **MT-70 S OC** | Outdoor, low to moderate pollution (C3 / C4 - low) | 1x 3 m | **2268364** | 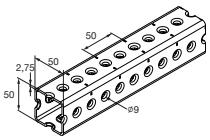  |
| **MT-70 OC** | | 1x 6 m | **2268365** | |

# MT Closed Profiles - Outdoor

## MT-80 Closed Profile - Outdoor

| Order Designation | Technical data | Sales pack quantity | Item number | |
|---|---|---|---|---|
| **MT-80 S OC** | Outdoor, low to moderate pollution (C3 / C4 - low) | 1x 3 m | **2268366** | 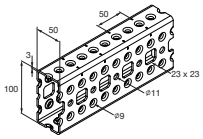 |
| **MT-80 OC** | | 1x 6 m | **2268367** | |

## MT-90 Closed Profile - Outdoor

| Order Designation | Technical data | Sales pack quantity | Item number | |
|---|---|---|---|---|
| **MT-90 S OC** | Outdoor, low to moderate pollution (C3 / C4 - low) | 1x 3 m | **2268368** | 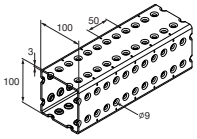 |
| **MT-90 OC** | | 1x 6 m | **2268369** | |

## MT-100 Closed Profile - Outdoor

| Order Designation | Technical data | Sales pack quantity | Item number | |
|---|---|---|---|---|
| **MT-100 S OC** | Outdoor, low to moderate pollution (C3 / C4 - low) | 1x 3 m | **2268490** | 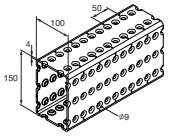 |
| **MT-100 OC** | | 1x 6 m | **2268491** | |

# Overview MT Trapeze Profiles, Open C-channels, Closed Profiles



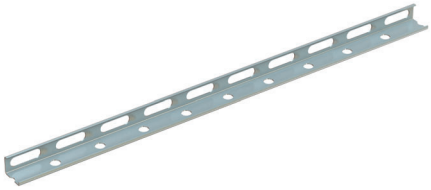

MT 10 - 2268492 (2 meter)
MT 10 S - 2360728 (3 meter)

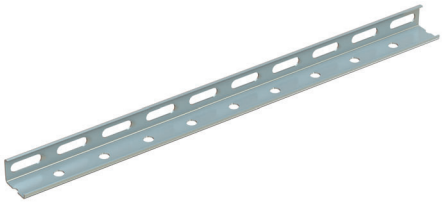

MT 15 - 2268493 (2 meter)
MT 15 S - 2360729 (3 meter)
MT 15 OC - 2268494 (2 meter)
MT 15 S OC - 2360920 (3 meter)

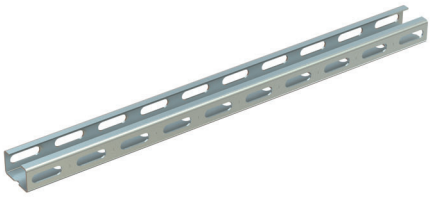

MT 20 - 2268495 (2 meter)
MT 20 S - 2360921 (3 meter)
MT 20 OC - 2268496 (2 meter)
MT 20 S OC - 2360922 (3 meter)

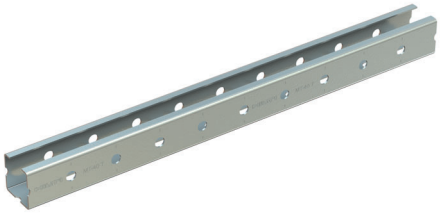

MT 40 T - 2268502 (6 meter)
MT 40 T S - 2360923 (3 meter)
MT 40 T OC - 2268504 (6 meter)
MT 40 T S OC - 2360924 (3 meter)

MT 30 - 2268498 (6 meter)
MT 30 S - 2268497 (3 meter)
MT 30 OC - 2268500 (6 meter)
MT 30 S OC - 2268499 (3 meter)

MT 40 - 2268506 (6 meter)
MT 40 S - 2268505 (3 meter)
MT 40 OC - 2268508 (6 meter)
MT 40 S OC - 2268507 (3 meter)

MT 40D - 2268518 (6 meter)
MT 40D S - 2268517 (3 meter)
MT 40D OC - 2268520 (6 meter)
MT 40D S OC - 2268519 (3 meter)

MT 50 - 2268510 (6 meter)
MT 50 S - 2268509 (3 meter)
MT 50 OC - 2268512 (6 meter)
MT 50 S OC - 2268511 (3 meter)

**MT 60 - 2268514 (6 meter)**
**MT 60 S - 2268513 (3 meter)**
**MT 60 OC - 2268516 (6 meter)**
**MT 60 S OC - 2268515 (3 meter)**

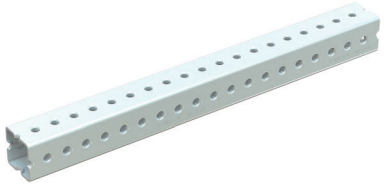

**MT 70 OC - 2268365 (6 meter)**
**MT 70 S OC - 2268364 (3 meter)**

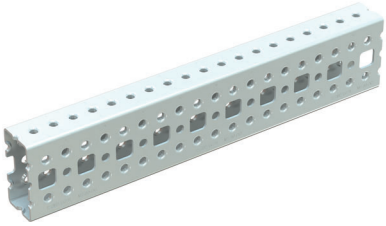

**MT 80 OC - 2268367 (6 meter)**
**MT 80 S OC - 2268366 (3 meter)**

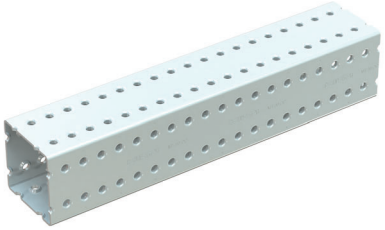

**MT 90 OC - 2268369 (6 meter)**
**MT 90 S OC - 2268368 (3 meter)**

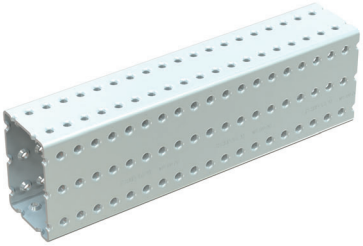

**MT 100 OC - 2268491 (6 meter)**
**MT 100 S OC - 2268490 (3 meter)**

# MT Profiles Technical Data

2

## Technical data for channel profile MT (pregalvanized & zing magnesium)

### trapeze profiles

**Definition of axes**

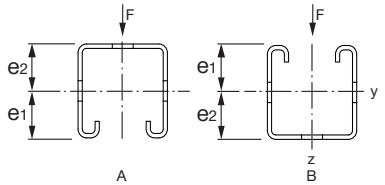


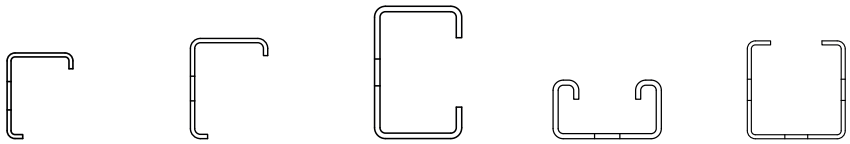

| | | | MT-10 | MT-15/ MT-15 OC | MT-20/ MT-20 OC | MT-30/ MT-30 OC | MT-40 T/ MT-40 T OC |
|---|---|---|---|---|---|---|---|
| Channel wall thickness | t | [mm] | 1,2 | 1,5 | 1,75 | 2,0 | 1,75 |
| Cross-sectional area | A | [mm²] | 48,43 | 85,2 | 148,65 | 180 | 175,59 |
| Channel weight | | [kg/m] | 0,3888 | 0,6784 | 1,267 | 1,486 | 1,69 |
| Delivered length | | [m] | 2 | 2 | 2 | 3/6 | 6 |
| **Material** | | | | | | | |
| Steel grade | | | S280GD | S280GD | S280GD | S280GD | S280GD |
| Permissible stress | $\delta_{perm}$ | [N/mm²] | 207,8 | 206,7 | 205,8 | 205.8 | 200,5 |
| E-Modul | | [N/mm²] | 210000 | 210000 | 210000 | 210000 | 210000 |
| **Surface** | | | | | | | |
| pregalvanized (DIN EN ISO 10346) | | | • | • | • | • | • |
| zinc magnesium (EN 10346 & ASTM A1046) | | | | • | • | • | • |
| **Cross-section values Y-axis** | | | | | | | |
| Axis of gravity A [1] | $e_1$ | [mm] | 9,25 | 11,90 | 21,25 | 12,04 | 23,05 |
| Axis of gravity B | $e_2$ | [mm] | 16,75 | 23,10 | 21,25 | 10,96 | 19,45 |
| Moment of inertia | $I_y$ | [cm⁴] | 0,40 | 1,27 | 3,65 | 1,21 | 4,84 |
| Permtion modulus A | $W_{y1}$ | [cm³] | 0,25 | 0,57 | 1,73 | 1,00 | 2,10 |
| Permtion modulus B | $W_{y2}$ | [cm³] | 0,41 | 1,00 | 1,73 | 1,10 | 2,48 |
| Radius of gyration | $i_y$ | [cm] | 0,91 | 1,22 | 1,57 | 0,82 | 1,66 |
| Permissible moment [2] | $M_y$ | [Nm] | 52 | 180 | 355 | 207 | 421 |
| **Z-axis** | | | | | | | |
| Moment of inertia | $I_z$ | [cm⁴] | 0,23 | 0,72 | 1,85 | 5,19 | 5,71 |
| Permtion modulus | $W_z$ | [cm³] | 0,15 | 0,36 | 1,07 | 2,44 | 2,69 |
| Radius of gyration | $i_z$ | [cm] | 0,69 | 0,92 | 1,12 | 1,70 | 1,80 |

### Design note

- Shown load values are recommended values with partial safety factors for actions and resistance included
- Design value = γ * recommended value (γ = 1.4 for MT-10 to MT-70; γ = 1.5 for MT-80 to MT-100)
- The design resistance of the products is defined in accordance with EN1993
- Load tables are based on stress and deflection calculations, lateral torsional buckling is not considered
- MT-10 to MT-70: The permissible stress $\sigma_D / \gamma_{G/Q}$ where y = 1,4. $\sigma_D$ results from the higher yield strength (point) resulting from cold forming as per EN 1993-1-3: 2010: $\sigma_D = f_{yk} / \gamma_M$ where $\gamma_M$ = 1,1.
- MT-80 to MT-100: The permissible stress $\sigma_D / \gamma_{G/Q}$ where y = 1,5

1) For the arithmetical bending dimensioning is the smaller value ($W_{y1}$, $W_{y2}$) decisive to ($W_{y1} = I_y / e_1$ bzw. $W_{y2} = I_y / e_2$).
2) My = $\delta_{perm}$ x min. ($W_{y1}$, $W_{y2}$)

| open C-channels (struts) | | | | MT-closed profile | | | |
|---|---|---|---|---|---|---|---|
| 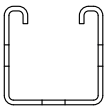 | 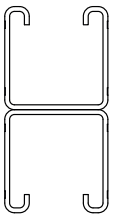 | 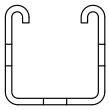 | 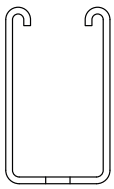 | 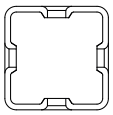 | 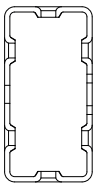 | 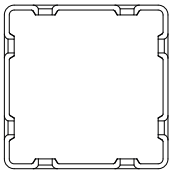 | 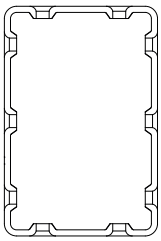 |
| **MT-40 MT-40 OC** | **MT-40D/ MT-40D OC** | **MT-50/ MT-50 OC** | **MT-60/ MT-60 OC** | **MT-70 OC** | **MT-80 OC** | **MT-90 OC** | **MT-100 OC** |
| 2,0 | 2,0 | 2,75 | 2,75 | 2,75 | 3,0 | 3,0 | 4,0 |
| 214 | 429,52 | 276,05 | 500,1 | 428,78 | 592,66 | 976,08 | 1555,34 |
| 2,039 | 4,299 | 2,744 | 4,017 | 3,909 | 6,058 | 8,973 | 15,096 |
| 3/6 | 3/6 | 3/6 | 3/6 | 3/6 | 3/6 | 3/6 | 3/6 |
| | | | | | | | |
| S280GD | S280GD | S280GD | S280GD | S350GD | S350GD | S350GD | S350GD |
| 202,2 | 202,2 | 207,8 | 202,3 | 227,3 | 233,3 | 233,3 | 233,3 |
| 210000 | 210000 | 210000 | 210000 | 210000 | 210000 | 210000 | 210000 |
| | | | | | | | |
| • | • | • | • | | | | |
| • | • | • | • | • | • | • | • |
| | | | | | | | |
| 21,76 | 42,50 | 22,04 | 36,62 | 25,00 | 50,00 | 50,00 | 75,00 |
| 20,74 | 42,50 | 20,46 | 35,38 | 25,00 | 50,00 | 50,00 | 75,00 |
| 5,77 | 29,96 | 7,04 | 28,67 | 15,87 | 87,97 | 150,85 | 487,36 |
| 2,65 | 7,05 | 3,19 | 7,83 | 6,35 | 17,59 | 30,17 | 64,98 |
| 2,78 | 7,05 | 3,44 | 8,10 | 6,35 | 17,59 | 30,17 | 64,98 |
| 1,64 | 2,64 | 1,60 | 2,39 | 1,92 | 3,85 | 3,93 | 5,60 |
| 536 | 1425 | 663 | 1584 | 1443 | 4105 | 7040 | 15162 |
| | | | | | | | |
| 6,59 | 13,18 | 8,27 | 17,11 | 15,87 | 24,50 | 150,85 | 260,98 |
| 3,10 | 6,20 | 3,89 | 8,05 | 6,35 | 9,80 | 30,17 | 52,20 |
| 1,76 | 1,75 | 1,73 | 1,85 | 1,92 | 2,03 | 3,93 | 4,10 |

## Point Load In The Middle Of The Span

2

## Technical data for channel profile MT (max. span width/deflection - point Load in the middle

### trapeze profiles

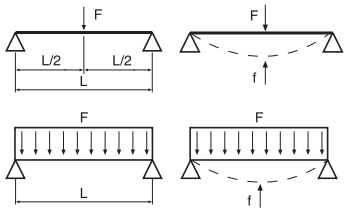


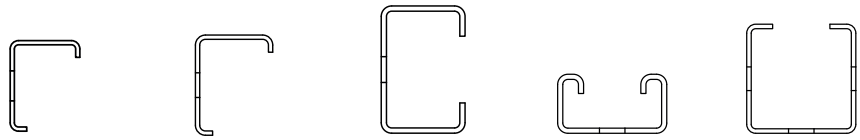

**Max. span width L [cm] / deflection f [mm] - Result**

| | MT-10 | | MT-15/ MT-15 OC | | MT-20/ MT-20 OC | | MT-30/ MT-30 OC | | MT-40 T/ MT-40 T OC | |
|---|---|---|---|---|---|---|---|---|---|---|
| **load F [kN]** | **L** | **f** | **L** | **f** | **L** | **f** | **L** | **f** | **L** | **f** |
| 0,25 | 83 | 0,4 | 157 | 7,8 | 260 | 12,9 | 152 | 7,6 | 294 | 14,7 |
| 0,50 | 42 | 0,1 | 93 | 3,2 | 188 | 9,3 | 109 | 5,5 | 215 | 10,7 |
| 0,75 | 28 | 0,0 | 62 | 1,4 | 155 | 7,7 | 90 | 4,5 | 178 | 8,9 |
| 1,00 | 21 | 0,0 | 47 | 0,8 | 134 | 6,6 | 78 | 3.9 | 154 | 7,6 |
| 1,25 | 17 | 0,0 | 37 | 0,5 | 113 | 5,0 | 66 | 2.9 | 134 | 6,2 |
| 1,50 | 14 | 0,0 | 31 | 0,4 | 94 | 3,4 | 55 | 2.1 | 112 | 4,3 |
| 1,75 | 12 | 0,0 | 27 | 0,3 | 81 | 2,5 | 47 | 1.5 | 96 | 3,2 |
| 2,00 | 10 | 0,0 | 23 | 0,2 | 71 | 1,9 | 41 | 1.2 | 84 | 2,4 |
| 2,25 | 9 | 0,0 | 21 | 0,2 | 63 | 1,5 | 37 | 0.9 | 75 | 1,9 |
| 2,50 | 8 | 0,0 | 19 | 0,1 | 57 | 1,2 | 33 | 0.7 | 67 | 1,6 |
| 2,75 | 8 | 0,0 | 17 | 0,1 | 52 | 1,0 | 30 | 0.6 | 61 | 1,3 |
| 3,00 | 7 | 0,0 | 16 | 0,1 | 47 | 0,9 | 28 | 0.5 | 56 | 1,1 |
| 3,50 | 6 | 0,0 | 13 | 0,1 | 41 | 0,6 | 24 | 0.4 | 48 | 0,8 |
| 4,00 | 5 | 0,0 | 12 | 0,1 | 36 | 0,5 | 21 | 0.3 | 42 | 0,6 |
| 4,50 | 5 | 0,0 | 10 | 0,0 | 32 | 0,4 | 18 | 0.2 | 37 | 0,5 |
| 5,00 | 4 | 0,0 | 9 | 0,0 | 28 | 0,3 | 17 | 0.2 | 34 | 0,4 |
| 6,00 | 3 | 0,0 | 8 | 0,0 | 24 | 0,2 | 14 | 0.1 | 28 | 0,3 |
| 7,00 | 3 | 0,0 | 7 | 0,0 | 20 | 0,2 | 12 | 0.1 | 24 | 0,2 |
| 8,00 | 3 | 0,0 | 6 | 0,0 | 18 | 0,1 | 10 | 0.1 | 21 | 0,2 |

### Design note

- Shown load values are recommended values with partial safety factors for actions and resistance included
- Design value = γ * recommended value (γ = 1.4 for MT-10 to MT-70; γ = 1.5 for MT-80 to MT-100)
- The design resistance of the products is defined in accordance with EN1993
- Load tables are based on stress and deflection calculations, lateral torsional buckling is not considered

**Selection example:**

- 1,0 kN (≈ 100 kg) should be carried by a channel with a channel span width L = 100cm (single span sinply supported).

**Solution:**

- Select the line with the load, F = 1,0 kN.
- The channels MT-20, MT-40 T up to MT-100 can be used because the permissible span width (table value) is larger or equal to the required span width of L = 100cm.

of span)

## open C-channels (struts) | MT-closed profile

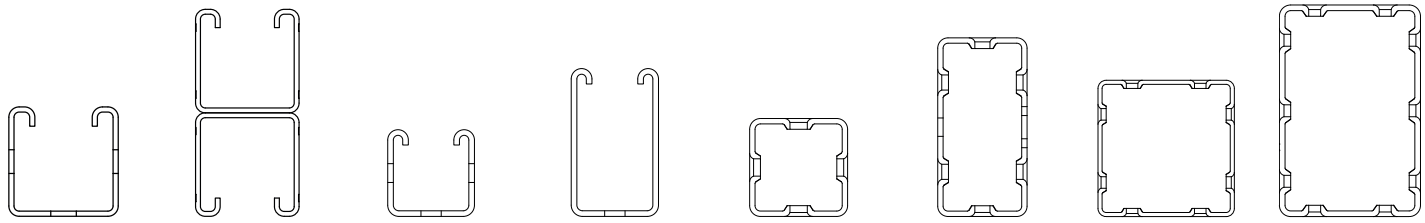

| MT-40/ MT-40 OC | | MT-40D/ MT-40D OC | | MT-50/ MT-50 OC | | MT-60/ MT-60 OC | | MT-70 OC | | MT-80 OC | | MT-90 OC | | MT-100 OC | |
|---|---|---|---|---|---|---|---|---|---|---|---|---|---|---|---|
| L | f | L | f | L | f | L | f | L | f | L | f | L | f | L | f |
| 317 | 15,8 | 600 | 29,4 | 339 | 16,9 | 600 | 29,9 | 469 | 23,4 | 600 | 11,6 | 600 | 8,3 | 600 | 3,6 |
| 234 | 11,7 | 489 | 24,4 | 254 | 12,6 | 482 | 24,1 | 368 | 18,4 | 600 | 17,7 | 600 | 11,9 | 600 | 4,7 |
| 194 | 9,6 | 418 | 20,9 | 212 | 10,6 | 411 | 20,5 | 311 | 15,5 | 600 | 23,8 | 600 | 15,4 | 600 | 5,8 |
| 169 | 8,4 | 371 | 18,5 | 185 | 9,3 | 363 | 18,1 | 274 | 13,6 | 600 | 29,9 | 600 | 19,0 | 600 | 6,9 |
| 151 | 7,6 | 336 | 16,8 | 167 | 8,3 | 329 | 16,4 | 247 | 12,3 | 551 | 27,5 | 600 | 22,5 | 600 | 8,0 |
| 138 | 6,9 | 309 | 15,4 | 152 | 7,6 | 302 | 15,0 | 227 | 11,3 | 512 | 25,6 | 600 | 26,1 | 600 | 9,1 |
| 122 | 5,5 | 287 | 14,4 | 141 | 7,0 | 281 | 14,0 | 211 | 10,5 | 479 | 23,9 | 600 | 29,6 | 600 | 10,2 |
| 107 | 4,2 | 270 | 13,5 | 132 | 6,5 | 264 | 13,2 | 198 | 9,9 | 452 | 22,6 | 572 | 28,6 | 600 | 11,3 |
| 95 | 3,3 | 248 | 11,6 | 117 | 5,1 | 249 | 12,4 | 187 | 9,3 | 429 | 21,4 | 545 | 27,2 | 600 | 12,4 |
| 86 | 2,7 | 224 | 9,5 | 106 | 4,2 | 237 | 11,8 | 177 | 8,8 | 409 | 20,4 | 522 | 26,0 | 600 | 13,5 |
| 78 | 2,2 | 204 | 7,9 | 96 | 3,5 | 227 | 11,3 | 169 | 8,4 | 391 | 19,5 | 501 | 25,0 | 600 | 14,6 |
| 71 | 1,9 | 188 | 6,7 | 88 | 2,9 | 208 | 9,6 | 162 | 8,1 | 376 | 18,8 | 482 | 24,1 | 600 | 15,7 |
| 61 | 1,4 | 161 | 4,9 | 76 | 2,1 | 179 | 7,1 | 150 | 7,5 | 349 | 17,4 | 450 | 22,5 | 600 | 17,9 |
| 54 | 1,1 | 141 | 3,8 | 66 | 1,6 | 157 | 5,4 | 141 | 7,0 | 328 | 16,3 | 424 | 21,2 | 600 | 20,1 |
| 48 | 0,8 | 126 | 3,0 | 59 | 1,3 | 140 | 4,3 | 128 | 5,9 | 310 | 15,5 | 401 | 20,0 | 600 | 22,3 |
| 43 | 0,7 | 113 | 2,4 | 53 | 1,1 | 126 | 3,5 | 115 | 4,8 | 295 | 14,7 | 382 | 19,0 | 600 | 24,5 |
| 36 | 0,5 | 95 | 1,7 | 44 | 0,7 | 105 | 2,4 | 96 | 3,3 | 270 | 13,5 | 350 | 17,5 | 600 | 28,9 |
| 31 | 0,3 | 81 | 1,2 | 38 | 0,5 | 90 | 1,8 | 82 | 2,4 | 232 | 10,0 | 325 | 16,2 | 571 | 28,5 |
| 27 | 0,3 | 71 | 1,0 | 33 | 0,4 | 79 | 1,4 | 72 | 1,9 | 204 | 7,7 | 305 | 15,2 | 537 | 26,8 |

## Uniformly Distributed Load Along The Span

2

# Technical data for channel profile MT (max. span width/deflection - distributed load along th

## trapeze profiles

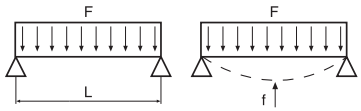


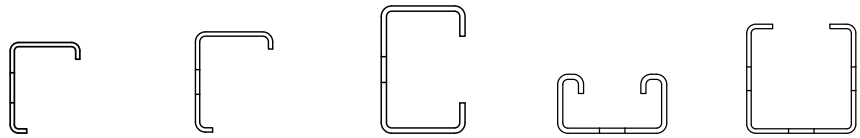

**Max. span width L [cm] / deflection f [mm] - Result**

| | MT-10 | | MT-15/ MT-15 OC | | MT-20/ MT-20 OC | | MT-30/ MT-30 OC | | MT-40 T/ MT-40 T OC | |
|---|---|---|---|---|---|---|---|---|---|---|
| **load F [kN]** | **L** | **f** | **L** | **f** | **L** | **f** | **L** | **f** | **L** | **f** |
| 0,25 | 162 | 1,7 | 196 | 9,7 | 318 | 15,9 | 187 | 9.3 | 354 | 17,6 |
| 0,50 | 83 | 0,4 | 141 | 7,0 | 235 | 11,7 | 137 | 6.8 | 267 | 13,3 |
| 0,75 | 55 | 0,2 | 116 | 5,8 | 194 | 9,6 | 113 | 5.6 | 222 | 11,0 |
| 1,00 | 42 | 0,1 | 93 | 4,0 | 169 | 8,4 | 98 | 4.9 | 194 | 9,7 |
| 1,25 | 33 | 0,1 | 75 | 2,6 | 152 | 7,6 | 88 | 4.3 | 174 | 8,6 |
| 1,50 | 28 | 0,0 | 62 | 1,8 | 139 | 6,9 | 80 | 4.0 | 159 | 7,9 |
| 1,75 | 24 | 0,0 | 53 | 1,3 | 129 | 6,4 | 74 | 3.7 | 148 | 7,4 |
| 2,00 | 21 | 0,0 | 47 | 1,0 | 120 | 5,9 | 69 | 3.4 | 138 | 6,8 |
| 2,25 | 19 | 0,0 | 42 | 0,8 | 113 | 5,6 | 66 | 3.3 | 131 | 6,5 |
| 2,50 | 17 | 0,0 | 37 | 0,6 | 108 | 5,4 | 62 | 3.1 | 124 | 6,2 |
| 2,75 | 15 | 0,0 | 34 | 0,5 | 103 | 5,1 | 59 | 3.0 | 118 | 5,8 |
| 3,00 | 14 | 0,0 | 31 | 0,4 | 94 | 4,3 | 55 | 2.6 | 112 | 5,4 |
| 3,50 | 12 | 0,0 | 27 | 0,3 | 81 | 3,2 | 47 | 1.9 | 96 | 4,0 |
| 4,00 | 10 | 0,0 | 23 | 0,3 | 71 | 2,4 | 41 | 1.4 | 84 | 3,0 |
| 4,50 | 9 | 0,0 | 21 | 0,2 | 63 | 1,9 | 37 | 1.1 | 75 | 2,4 |
| 5,00 | 8 | 0,0 | 19 | 0,2 | 57 | 1,6 | 33 | 0.9 | 67 | 2,0 |
| 6,00 | 7 | 0,0 | 16 | 0,1 | 47 | 1,1 | 28 | 0.6 | 56 | 1,4 |
| 7,00 | 6 | 0,0 | 13 | 0,1 | 41 | 0,8 | 24 | 0.5 | 48 | 1,0 |
| 8,00 | 5 | 0,0 | 12 | 0,1 | 36 | 0,6 | 21 | 0.4 | 42 | 0,8 |

### Design note

- Shown load values are recommended values with partial safety factors for actions and resistance included
- Design value = γ * recommended value (γ = 1.4 for MT-10 to MT-70; γ = 1.5 for MT-80 to MT-100)
- The design resistance of the products is defined in accordance with EN1993
- Load tables are based on stress and deflection calculations, lateral torsional buckling is not considered

ne span)

## open C-channels (struts)

## MT-closed profile

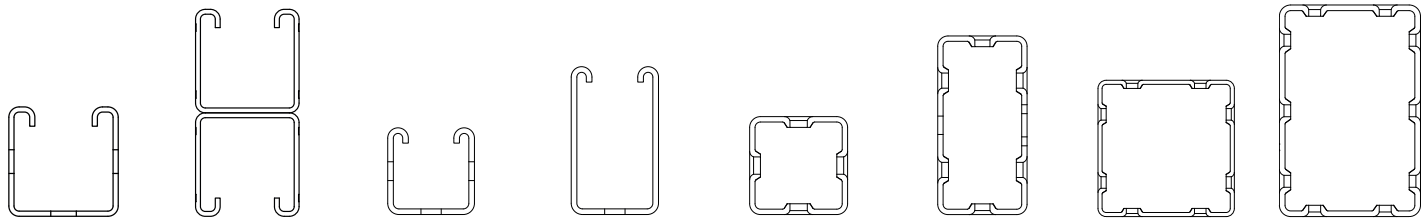

| MT-40/ MT-40 OC | | MT-40D/ MT-40D OC | | MT-50/ MT-50 OC | | MT-60/ MT-60 OC | | MT-70 OC | | MT-80 OC | | MT-90 OC | | MT-100 OC | |
|---|---|---|---|---|---|---|---|---|---|---|---|---|---|---|---|
| L | f | L | f | L | f | L | f | L | f | L | f | L | f | L | f |
| 377 | 18,8 | 600 | 22,7 | 397 | 19,8 | 600 | 22,9 | 529 | 26,4 | 600 | 9,3 | 600 | 7,0 | 600 | 3,2 |
| 289 | 14,4 | 570 | 28,5 | 311 | 15,5 | 564 | 28,2 | 437 | 21,8 | 600 | 13,1 | 600 | 9,2 | 600 | 3,9 |
| 241 | 12,0 | 500 | 25,0 | 262 | 13,0 | 493 | 24,6 | 378 | 18,9 | 600 | 17,0 | 600 | 11,4 | 600 | 4,6 |
| 211 | 10,5 | 450 | 22,4 | 231 | 11,5 | 443 | 22,1 | 336 | 16,8 | 600 | 20,8 | 600 | 13,7 | 600 | 5,2 |
| 190 | 9,5 | 411 | 20,5 | 208 | 10,4 | 404 | 20,1 | 306 | 15,3 | 600 | 24,6 | 600 | 15,9 | 600 | 5,9 |
| 174 | 8,7 | 381 | 19,0 | 191 | 9,5 | 374 | 18,7 | 281 | 14,0 | 600 | 28,4 | 600 | 18,1 | 600 | 6,6 |
| 162 | 8,1 | 356 | 17,8 | 178 | 8,9 | 349 | 17,4 | 263 | 13,1 | 581 | 29,0 | 600 | 20,3 | 600 | 7,3 |
| 151 | 7,5 | 335 | 16,7 | 167 | 8,3 | 329 | 16,4 | 247 | 12,3 | 551 | 27,5 | 600 | 22,5 | 600 | 8,0 |
| 143 | 7,1 | 318 | 15,9 | 157 | 7,8 | 311 | 15,4 | 234 | 11,6 | 526 | 26,3 | 600 | 24,8 | 600 | 8,7 |
| 136 | 6,8 | 303 | 15,1 | 149 | 7,4 | 297 | 14,8 | 222 | 11,1 | 503 | 25,1 | 600 | 27,0 | 600 | 9,4 |
| 129 | 6,4 | 290 | 14,4 | 143 | 7,1 | 284 | 14,2 | 213 | 10,6 | 483 | 24,1 | 600 | 29,2 | 600 | 10,0 |
| 124 | 6,2 | 278 | 13,9 | 137 | 6,8 | 272 | 13,5 | 204 | 10,1 | 465 | 23,2 | 587 | 29,3 | 600 | 10,7 |
| 115 | 5,7 | 259 | 12,9 | 127 | 6,3 | 253 | 12,6 | 189 | 9,4 | 434 | 21,7 | 552 | 27,5 | 600 | 12,1 |
| 107 | 5,2 | 243 | 12,1 | 119 | 5,9 | 237 | 11,8 | 177 | 8,8 | 409 | 20,4 | 522 | 26,0 | 600 | 13,5 |
| 95 | 4,2 | 229 | 11,4 | 111 | 5,5 | 224 | 11,2 | 167 | 8,3 | 387 | 19,3 | 496 | 24,7 | 600 | 14,9 |
| 86 | 3,4 | 218 | 10,8 | 106 | 5,2 | 213 | 10,6 | 159 | 7,9 | 369 | 18,4 | 474 | 23,7 | 600 | 16,2 |
| 71 | 2,3 | 188 | 8,3 | 88 | 3,6 | 195 | 9,7 | 145 | 7,2 | 338 | 16,9 | 436 | 21,8 | 600 | 19,0 |
| 61 | 1,7 | 161 | 6,1 | 76 | 2,7 | 179 | 8,8 | 134 | 6,6 | 314 | 15,7 | 406 | 20,3 | 600 | 21,7 |
| 54 | 1,3 | 141 | 4,7 | 66 | 2,0 | 157 | 6,8 | 126 | 6,3 | 295 | 14,7 | 381 | 19,0 | 600 | 24,5 |

## Point Load In The Middle Of The Span

2

## Technical data for channel profile MT (max. span width/deflection - point Load in the middle

### trapeze profiles

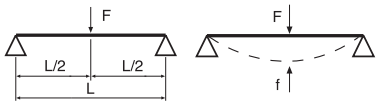


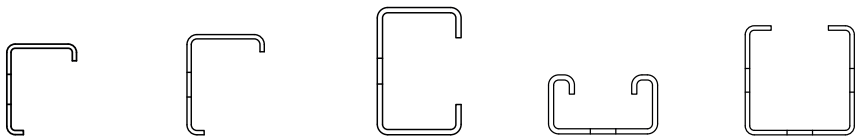

**Max. load F [kN] / deflection f [mm] - Result**

| | MT-10 | | MT-15/ MT-15 OC | | MT-20/ MT-20 OC | | MT-30/ MT-30 OC | | MT-40 T/ MT-40 T OC | |
|---|---|---|---|---|---|---|---|---|---|---|
| **span width L [cm]** | **F** | **f** | **F** | **f** | **F** | **f** | **F** | **f** | **F** | **f** |
| 25 | 0,83 | 0,0 | 1,87 | 0,2 | 5,69 | 0,2 | 3.31 | 0.4 | 6,74 | 0,2 |
| 50 | 0,42 | 0,1 | 0,94 | 0,9 | 2,84 | 1,0 | 1.65 | 1.7 | 3,36 | 0,9 |
| 75 | 0,28 | 0,3 | 0,62 | 2,1 | 1,89 | 2,2 | 1.08 | 3.7 | 2,24 | 1,9 |
| 100 | 0,21 | 0,5 | 0,46 | 3,7 | 1,42 | 3,9 | 0.60 | 5.0 | 1,68 | 3,5 |
| 125 | 0,16 | 0,8 | 0,37 | 5,7 | 1,13 | 6,1 | 0.38 | 6.2 | 1,34 | 5,4 |
| 150 | 0,14 | 1,2 | 0,28 | 7,5 | 0,80 | 7,5 | 0.26 | 7.5 | 1,07 | 7,5 |
| 175 | 0,12 | 1,6 | 0,20 | 8,7 | 0,59 | 8,7 | 0.18 | 8.7 | 0,78 | 8,7 |
| 200 | 0,10 | 2,1 | 0,15 | 9,9 | 0,44 | 10,0 | 0.13 | 9.9 | 0,59 | 10,0 |
| 225 | 0,09 | 2,6 | 0,12 | 11,2 | 0,34 | 11,2 | 0.10 | 11.0 | 0,46 | 11,2 |
| 250 | 0,08 | 3,2 | 0,09 | 12,4 | 0,27 | 12,4 | 0.07 | 12.2 | 0,36 | 12,4 |
| 275 | 0,07 | 3,9 | 0,07 | 13,6 | 0,22 | 13,6 | 0.05 | 13.3 | 0,29 | 13,6 |
| 300 | 0,06 | 4,7 | 0,06 | 14,7 | 0,18 | 14,8 | 0.04 | 14.4 | 0,24 | 14,8 |
| 325 | 0,06 | 5,5 | 0,05 | 15,9 | 0,15 | 16,0 | 0.02 | 15.4 | 0,19 | 16,0 |
| 350 | 0,05 | 6,4 | 0,04 | 17,0 | 0,12 | 17,2 | 0.01 | 16.3 | 0,16 | 17,2 |
| 375 | 0,05 | 7,4 | 0,03 | 18,1 | 0,10 | 18,3 | | | 0,13 | 18,3 |
| 400 | 0,04 | 8,5 | 0,02 | 19,1 | 0,08 | 19,4 | | | 0,11 | 19,4 |
| 425 | 0,04 | 9,6 | 0,02 | 20,1 | 0,06 | 20,5 | | | 0,09 | 20,5 |
| 450 | 0,04 | 10,8 | 0,01 | 21,1 | 0,05 | 21,6 | | | 0,07 | 21,6 |
| 475 | 0,03 | 12,1 | 0,01 | 22,0 | 0,04 | 22,6 | | | 0,05 | 22,6 |
| 500 | 0,03 | 13,5 | | | 0,03 | 23,6 | | | 0,04 | 23,6 |
| 525 | 0,03 | 15,0 | | | 0,02 | 24,6 | | | 0,03 | 24,5 |
| 550 | 0,03 | 16,5 | | | 0,01 | 25,5 | | | 0,02 | 25,4 |
| 575 | 0,03 | 18,2 | | | 0,01 | 26,3 | | | 0,01 | 26,3 |
| 600 | 0,02 | 19,9 | | | | | | | | |

### Design note

- Shown load values are recommended values with partial safety factors for actions and resistance included
- Design value = γ * recommended value (γ = 1.4 for MT-10 to MT-70; γ = 1.5 for MT-80 to MT-100)
- The design resistance of the products is defined in accordance with EN1993
- Load tables are based on stress and deflection calculations, lateral torsional buckling is not considered

e of span)

## open C-channels (struts) | MT-closed profile

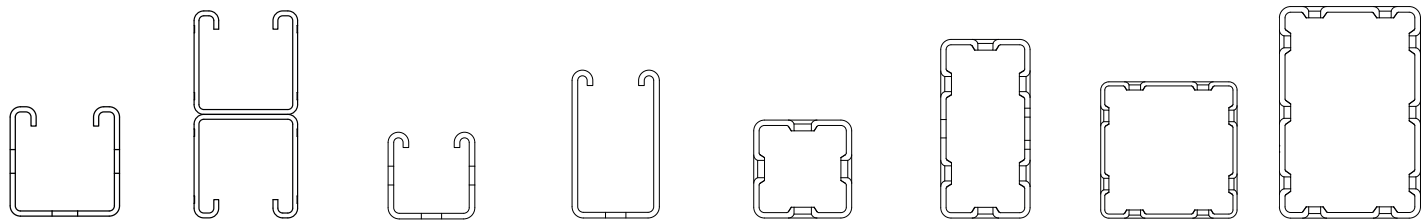

| MT-40/ MT-40 OC | | MT-40D/ MT-40D OC | | MT-50/ MT-50 OC | | MT-60/ MT-60 OC | | MT-70 OC | | MT-80 OC | | MT-90 OC | | MT-100 OC | |
|---|---|---|---|---|---|---|---|---|---|---|---|---|---|---|---|
| F | f | F | f | F | f | F | f | F | f | F | f | F | f | F | f |
| 8,58 | 0,2 | 22,80 | 0,1 | 10,61 | 0,2 | 25,35 | 0,1 | 23,08 | 0,2 | 65,68 | 0,1 | 106,17 | 0,1 | 222,70 | 0,1 |
| 4,29 | 0,9 | 11,39 | 0,5 | 5,30 | 0,9 | 12,67 | 0,5 | 11,53 | 0,9 | 32,83 | 0,5 | 56,29 | 0,5 | 121,26 | 0,3 |
| 2,85 | 2,1 | 7,59 | 1,1 | 3,53 | 2,1 | 8,44 | 1,2 | 7,68 | 2,0 | 21,87 | 1,0 | 37,51 | 1,0 | 80,81 | 0,7 |
| 2,14 | 3,7 | 5,68 | 1,9 | 2,64 | 3,7 | 6,32 | 2,2 | 5,75 | 3,6 | 16,39 | 1,9 | 28,11 | 1,9 | 60,57 | 1,2 |
| 1,70 | 5,8 | 4,53 | 3,0 | 2,11 | 5,9 | 5,05 | 3,4 | 4,59 | 5,6 | 13,10 | 2,9 | 22,47 | 2,9 | 48,43 | 1,9 |
| 1,27 | 7,5 | 3,77 | 4,3 | 1,55 | 7,5 | 4,20 | 4,9 | 3,52 | 7,5 | 10,90 | 4,2 | 18,70 | 4,2 | 40,32 | 2,8 |
| 0,93 | 8,7 | 3,22 | 5,8 | 1,13 | 8,7 | 3,59 | 6,7 | 2,57 | 8,7 | 9,33 | 5,7 | 16,01 | 5,7 | 34,52 | 3,8 |
| 0,70 | 10,0 | 2,81 | 7,6 | 0,85 | 10,0 | 3,13 | 8,8 | 1,95 | 10,0 | 8,15 | 7,4 | 13,99 | 7,4 | 30,17 | 4,9 |
| 0,54 | 11,2 | 2,49 | 9,6 | 0,66 | 11,2 | 2,77 | 11,1 | 1,52 | 11,2 | 7,23 | 9,4 | 12,41 | 9,4 | 26,79 | 6,3 |
| 0,43 | 12,4 | 2,23 | 11,9 | 0,52 | 12,4 | 2,24 | 12,5 | 1,21 | 12,4 | 6,49 | 11,6 | 11,15 | 11,6 | 24,07 | 7,7 |
| 0,35 | 13,6 | 1,91 | 13,7 | 0,42 | 13,6 | 1,83 | 13,7 | 0,98 | 13,7 | 5,75 | 13,7 | 9,88 | 13,7 | 21,85 | 9,4 |
| 0,28 | 14,8 | 1,59 | 14,9 | 0,34 | 14,8 | 1,52 | 14,9 | 0,81 | 14,9 | 4,80 | 15,0 | 8,26 | 15,0 | 19,99 | 11,1 |
| 0,23 | 16,0 | 1,33 | 16,1 | 0,27 | 16,0 | 1,28 | 16,1 | 0,67 | 16,1 | 4,06 | 16,2 | 7,00 | 16,2 | 18,42 | 13,1 |
| 0,19 | 17,2 | 1,13 | 17,4 | 0,22 | 17,1 | 1,08 | 17,4 | 0,56 | 17,3 | 3,47 | 17,4 | 5,99 | 17,4 | 17,06 | 15,2 |
| 0,15 | 18,3 | 0,96 | 18,6 | 0,18 | 18,3 | 0,92 | 18,6 | 0,47 | 18,4 | 3,00 | 18,7 | 5,17 | 18,7 | 15,89 | 17,4 |
| 0,13 | 19,4 | 0,83 | 19,8 | 0,15 | 19,4 | 0,79 | 19,8 | 0,39 | 19,6 | 2,60 | 19,9 | 4,50 | 19,9 | 14,86 | 19,9 |
| 0,10 | 20,5 | 0,71 | 20,9 | 0,12 | 20,4 | 0,68 | 21,0 | 0,33 | 20,7 | 2,28 | 21,1 | 3,95 | 21,1 | 13,16 | 21,2 |
| 0,08 | 21,6 | 0,61 | 22,1 | 0,09 | 21,5 | 0,59 | 22,1 | 0,27 | 21,9 | 2,00 | 22,3 | 3,48 | 22,3 | 11,66 | 22,4 |
| 0,06 | 22,6 | 0,53 | 23,3 | 0,07 | 22,5 | 0,51 | 23,3 | 0,23 | 22,9 | 1,77 | 23,5 | 308 | 23,6 | 10,39 | 23,6 |
| 0,05 | 23,6 | 0,46 | 24,4 | 0,05 | 23,4 | 0,44 | 24,4 | 0,19 | 24,0 | 1,56 | 24,7 | 2,73 | 24,8 | 9,30 | 24,9 |
| 0,03 | 24,5 | 0,39 | 25,6 | 0,03 | 24,3 | 0,38 | 25,6 | 0,15 | 25,0 | 1,39 | 25,9 | 2,43 | 26,0 | 8,37 | 26,1 |
| 0,02 | 25,4 | 0,34 | 26,7 | 0,01 | 25,2 | 0,33 | 26,7 | 0,12 | 26,1 | 1,24 | 27,1 | 2,17 | 27,2 | 7,55 | 27,3 |
| 0,01 | 26,3 | 0,29 | 27,7 | | | 0,28 | 27,8 | 0,09 | 27,0 | 1,10 | 28,3 | 1,94 | 28,3 | 6,83 | 28,5 |
| | | 0,24 | 28,8 | | | 0,24 | 28,8 | 0,06 | 28,0 | 0,98 | 29,4 | 1,74 | 29,5 | 6,20 | 29,7 |

## Uniformly Distributed Load Along The Span

2

## Technical data for channel profile MT (max. span width/deflection - distributed load along th

### trapeze profiles

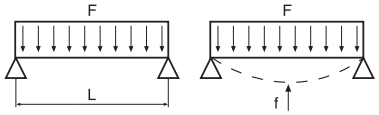


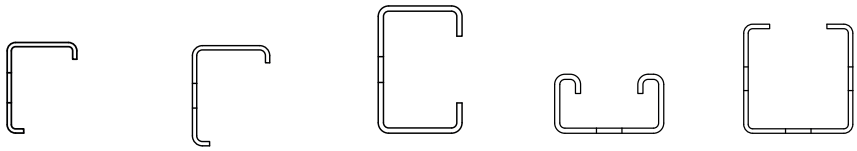

| | Max. Last F [kN]/Durchbiegung f [mm], max. L/200 bei Gleichlast | | | | | | | | | |
|---|---|---|---|---|---|---|---|---|---|---|
| | MT-10 | | MT-15/ MT-15 OC | | MT-20/ MT-20 OC | | MT-30/ MT-30 OC | | MT-40 T/ MT-40 T OC | |
| span width L [cm] | F | f | F | f | F | f | F | f | F | f |
| 25 | 1,66 | 0,0 | 3,75 | 0,3 | 8,65 | 0,2 | 6.61 | 0.5 | 13,47 | 0,3 |
| 50 | 0,83 | 0,2 | 1,87 | 1,1 | 5,68 | 1,2 | 3.30 | 2.1 | 6,73 | 1,1 |
| 75 | 0,55 | 0,4 | 1,24 | 2,6 | 3,78 | 2,7 | 1.72 | 3.8 | 4,48 | 2,4 |
| 100 | 0,41 | 0,6 | 0,93 | 4,6 | 2,83 | 4,8 | 0.96 | 5.0 | 3,35 | 4,3 |
| 125 | 0,33 | 1,0 | 0,65 | 6,3 | 1,87 | 6,3 | 0.61 | 6.3 | 2,47 | 6,3 |
| 150 | 0,27 | 1,4 | 0,44 | 7,5 | 1,29 | 7,5 | 0.41 | 7.5 | 1,71 | 7,5 |
| 175 | 0,23 | 2,0 | 0,32 | 8,8 | 0,94 | 8,8 | 0.29 | 8.8 | 1,24 | 8,8 |
| 200 | 0,20 | 2,6 | 0,24 | 10,0 | 0,71 | 10,0 | 0.21 | 10.0 | 0,94 | 10,0 |
| 225 | 0,18 | 3,2 | 0,19 | 11,3 | 0,55 | 11,3 | 0.16 | 11.3 | 0,73 | 11,3 |
| 250 | 0,16 | 4,0 | 0,15 | 12,5 | 0,44 | 12,5 | 0.12 | 12.5 | 0,58 | 12,5 |
| 275 | 0,14 | 4,8 | 0,12 | 13,8 | 0,35 | 13,8 | 0.09 | 13.8 | 0,47 | 13,8 |
| 300 | 0,13 | 5,7 | 0,09 | 15,0 | 0,29 | 15,0 | 0.06 | 15.0 | 0,38 | 15,0 |
| 325 | 0,12 | 6,7 | 0,07 | 16,3 | 0,24 | 16,3 | 0.04 | 16.3 | 0,31 | 16,3 |
| 350 | 0,11 | 7,8 | 0,06 | 17,5 | 0,20 | 17,5 | 0.03 | 17.5 | 0,26 | 17,5 |
| 375 | 0,10 | 9,0 | 0,05 | 18,8 | 0,16 | 18,8 | 0.01 | 18.8 | 0,21 | 18,8 |
| 400 | 0,09 | 10,2 | 0,04 | 20,0 | 0,13 | 20,0 | | | 0,18 | 20,0 |
| 425 | 0,08 | 11,5 | 0,03 | 21,3 | 0,11 | 21,3 | | | 0,14 | 21,3 |
| 450 | 0,08 | 12,9 | 0,02 | 22,5 | 0,09 | 22,5 | | | 0,12 | 22,5 |
| 475 | 0,07 | 14,4 | 0,01 | 23,8 | 0,07 | 23,8 | | | 0,09 | 23,8 |
| 500 | 0,06 | 16,0 | 0,01 | 25,0 | 0,05 | 25,0 | | | 0,07 | 25,0 |
| 525 | 0,06 | 17,6 | | | 0,04 | 26,3 | | | 0,05 | 26,3 |
| 550 | 0,05 | 19,3 | | | 0,03 | 27,5 | | | 0,04 | 27,5 |
| 575 | 0,05 | 21,1 | | | 0,02 | 28,8 | | | 0,02 | 28,8 |
| 600 | 0,05 | 23,0 | | | 0,01 | 30,0 | | | 0,01 | 30,0 |

### Design note

- Shown load values are recommended values with partial safety factors for actions and resistance included
- Design value = γ * recommended value (γ = 1.4 for MT-10 to MT-70; γ = 1.5 for MT-80 to MT-100)
- The design resistance of the products is defined in accordance with EN1993
- Load tables are based on stress and deflection calculations, lateral torsional buckling is not considered

ne span)

## open C-channels (struts) | MT-closed profile

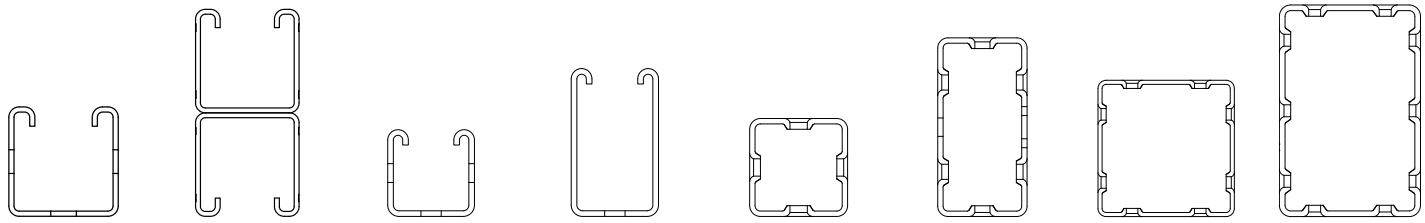

| MT-40/ MT-40 OC | | MT-40D/ MT-40D OC | | MT-50/ MT-50 OC | | MT-60/ MT-60 OC | | MT-70 OC | | MT-80 OC | | MT-90 OC | | MT-100 OC | |
|---|---|---|---|---|---|---|---|---|---|---|---|---|---|---|---|
| F | f | F | f | F | f | F | f | F | f | F | f | F | f | F | f |
| 17,16 | 0,3 | 27,12 | 0,1 | 21,22 | 0,3 | 50,70 | 0,2 | 46,17 | 0,3 | 124,57 | 0,1 | 106,17 | 0,1 | 222,70 | 0,0 |
| 8,57 | 1,2 | 22,78 | 0,6 | 10,60 | 1,2 | 25,34 | 0,7 | 23,07 | 1,1 | 65,66 | 0,6 | 106,17 | 0,5 | 222,70 | 0,4 |
| 5,71 | 2,6 | 15,17 | 1,3 | 7,06 | 2,6 | 16,87 | 1,5 | 15,36 | 2,5 | 43,75 | 1,3 | 75,02 | 1,3 | 161,62 | 0,9 |
| 4,27 | 4,6 | 11,36 | 2,4 | 5,28 | 4,7 | 12,64 | 2,7 | 11,51 | 4,5 | 32,78 | 2,3 | 56,23 | 2,3 | 121,15 | 1,5 |
| 2,95 | 6,3 | 9,07 | 3,7 | 3,60 | 6,3 | 10,09 | 4,3 | 8,14 | 6,3 | 26,20 | 3,6 | 44,94 | 3,6 | 96,85 | 2,4 |
| 2,04 | 7,5 | 7,54 | 5,3 | 2,48 | 7,5 | 8,39 | 6,2 | 5,63 | 7,5 | 21,80 | 5,2 | 37,41 | 5,2 | 80,64 | 3,5 |
| 1,48 | 8,8 | 6,44 | 7,2 | 1,81 | 8,8 | 7,17 | 8,4 | 4,11 | 8,8 | 18,66 | 7,1 | 32,02 | 7,1 | 69,05 | 4,7 |
| 1,12 | 10,0 | 5,62 | 9,4 | 1,36 | 10,0 | 5,70 | 10,0 | 3,12 | 10,0 | 16,30 | 9,3 | 27,98 | 9,3 | 60,35 | 6,2 |
| 0,87 | 11,3 | 4,68 | 11,3 | 1,06 | 11,3 | 4,48 | 11,3 | 2,44 | 11,3 | 13,88 | 11,3 | 23,83 | 11,3 | 53,57 | 7,8 |
| 0,69 | 12,5 | 3,76 | 12,5 | 0,84 | 12,5 | 3,60 | 12,5 | 1,95 | 12,5 | 11,20 | 12,5 | 19,24 | 12,5 | 48,14 | 9,6 |
| 0,56 | 13,8 | 3,08 | 13,8 | 0,67 | 13,8 | 2,95 | 13,8 | 1,59 | 13,8 | 9,21 | 13,8 | 15,84 | 13,8 | 43,69 | 11,7 |
| 0,46 | 15,0 | 2,56 | 15,0 | 0,55 | 15,0 | 2,45 | 15,0 | 1,31 | 15,0 | 7,70 | 15,0 | 13,25 | 15,0 | 39,98 | 13,9 |
| 0,37 | 16,3 | 2,15 | 16,3 | 0,45 | 16,3 | 2,06 | 16,3 | 1,08 | 16,3 | 6,52 | 16,3 | 11,22 | 16,3 | 36,72 | 16,3 |
| 0,31 | 17,5 | 1,82 | 17,5 | 0,37 | 17,5 | 1,75 | 17,5 | 0,91 | 17,5 | 5,58 | 17,5 | 9,62 | 17,5 | 31,55 | 17,5 |
| 0,25 | 18,8 | 1,56 | 18,8 | 0,30 | 18,8 | 1,49 | 18,8 | 0,76 | 18,8 | 4,82 | 18,8 | 8,31 | 18,8 | 27,38 | 18,8 |
| 0,21 | 20,0 | 1,34 | 20,0 | 0,24 | 20,0 | 1,28 | 20,0 | 0,64 | 20,0 | 4,19 | 20,0 | 7,24 | 20,0 | 23,96 | 20,0 |
| 0,17 | 21,3 | 1,15 | 21,3 | 0,20 | 21,3 | 1,11 | 21,3 | 0,54 | 21,3 | 3,67 | 21,3 | 6,35 | 21,3 | 21,12 | 21,3 |
| 0,14 | 22,5 | 1,00 | 22,5 | 0,16 | 22,5 | 0,96 | 22,5 | 0,46 | 22,5 | 3,23 | 22,5 | 5,60 | 22,5 | 18,73 | 22,5 |
| 0,11 | 23,8 | 0,87 | 23,8 | 0,12 | 23,8 | 0,83 | 23,8 | 0,38 | 23,8 | 2,86 | 23,8 | 4,97 | 23,8 | 16,70 | 23,8 |
| 0,08 | 25,0 | 0,75 | 25,0 | 0,09 | 25,0 | 0,72 | 25,0 | 0,32 | 25,0 | 2,53 | 25,0 | 4,42 | 25,0 | 14,97 | 25,0 |
| 0,05 | 26,3 | 0,65 | 26,3 | 0,06 | 26,3 | 0,63 | 26,3 | 0,26 | 26,3 | 2,26 | 26,3 | 3,94 | 26,3 | 13,47 | 26,3 |
| 0,04 | 27,5 | 0,56 | 27,5 | 0,04 | 27,5 | 0,54 | 27,5 | 0,21 | 27,5 | 2,01 | 27,5 | 3,53 | 27,5 | 12,16 | 27,5 |
| 0,02 | 28,8 | 0,48 | 28,8 | 0,01 | 28,8 | 0,47 | 28,8 | 0,16 | 28,8 | 1,80 | 28,8 | 3,16 | 28,8 | 11,02 | 28,8 |
| 0,01 | 30,0 | 0,41 | 30,0 | | | 0,40 | 30,0 | 0,12 | 30,0 | 1,61 | 30,0 | 2,84 | 30,0 | 10,01 | 30,0 |

## Buckling

2

# Permissible buckling load for channel profile MT

## trapeze profiles

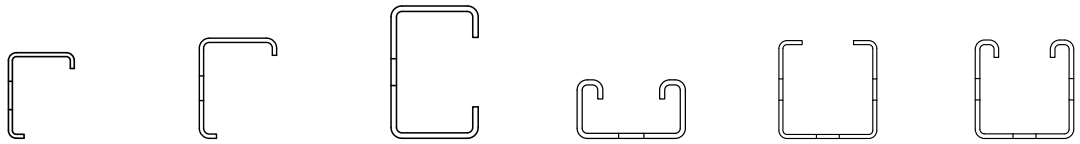

| Buckling length Sk [cm] | MT-10 permissible buckling load [kN] | MT-15 / MT-15 OC permissible buckling load [kN] | MT-20 / MT-20 OC permissible buckling load [kN] | MT-30 / MT-30 OC permissible buckling load [kN] | MT-40 T / MT-40 T OC permissible buckling load [kN] | MT-40 / MT-40 OC permissible buckling load [kN] |
|---|---|---|---|---|---|---|
| 25 | N/A | N/A | 29,40 | 30,51 | 33.00 | |
| 50 | | | 24,86 | 22,72 | 24.00 | |
| 75 | | | 19,67 | 15,10 | 15.56 | |
| 100 | | | 14,70 | 10,03 | 10.22 | |
| 125 | | | 10,86 | 7,02 | 7.11 | |
| 150 | | | 8,19 | 5,16 | 5.22 | |
| 175 | | | 6,33 | 3,96 | 3.99 | |
| 200 | | | 5,03 | 3,13 | 3.16 | |
| 225 | | | 4,08 | 2,54 | 2.56 | |
| 250 | | | 3,37 | 2,11 | 2.12 | |
| 275 | | | 2,83 | 1,78 | 1.79 | |
| 300 | | | 2,41 | 1,52 | 1.52 | |

**Flexural buckling:**
Rod length l (cm) / euler factor
β/Sk (cm) effective length
= l • β

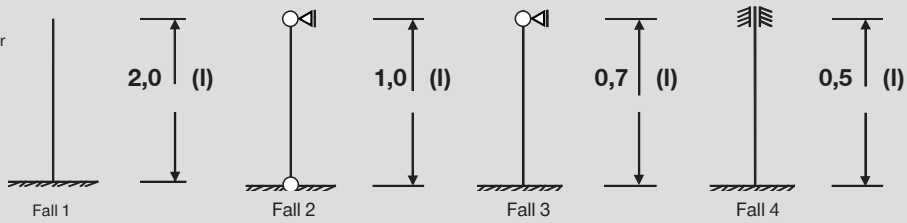


## Design note

- Shown load values are recommended values with partial safety factors for actions and resistance included
- Design value = γ * recommended value (γ = 1.4 for MT-10 to MT-70; γ = 1.5 for MT-80 to MT-100)
- The design resistance of the products is defined in accordance with EN1993
- Load tables are based on stress and deflection calculations, lateral torsional buckling is not considered
- MT-10 to MT-70: $\gamma_{G/Q}$ = 1,4 → $F_D$* = permissible buckling load x 1,4
- MT-80 to MT-100: $\gamma_{G/Q}$ = 1,5 → $F_D$* = permissible buckling load x 1,5

Flexural buckling:
Sk = l * β
Sk [cm]: buckling length
l [cm]: channel/girder length
β: Euler factor

*(design value)

| | open C-channels (struts) | | | MT-closed profile | | |
|---|---|---|---|---|---|---|
| 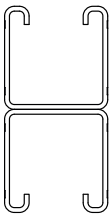 | 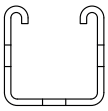 | 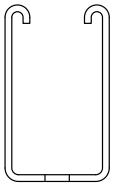 | 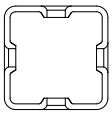 | 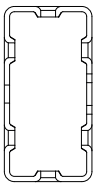 | 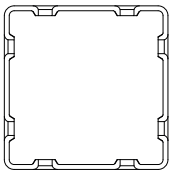 | 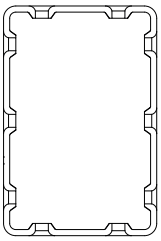 |
| **MT-40D / MT-40D OC permissible buckling load [kN]** | **MT-50 / MT-50 OC permissible buckling load [kN]** | **MT-60 / MT-60 OC permissible buckling load [kN]** | **MT-70 OC permissible buckling load [kN]** | **MT-80 OC permissible buckling load [kN]** | **MT-90 OC permissible buckling load [kN]** | **MT-100 OC permissible buckling load [kN]** |
| 87,97 | 55,68 | 68,93 | 99,01 | 128,31 | 219,78 | 350,41 |
| 80,21 | 47,92 | 52,16 | 90,61 | 118,07 | 210,74 | 336,93 |
| 72,00 | 39,23 | 36,33 | 81,79 | 107,42 | 202,00 | 323,55 |
| 62,95 | 30,58 | 25,80 | 72,10 | 95,79 | 193,28 | 310,24 |
| 53,45 | 23,51 | 19,47 | 61,82 | 83,33 | 184,34 | 296,65 |
| 44,43 | 18,32 | 15,55 | 51,88 | 70,94 | 175,02 | 282,54 |
| 36,66 | 14,62 | 12,97 | 43,12 | 59,66 | 165,24 | 267,77 |
| 30,34 | 11,94 | 11,18 | 35,87 | 50,05 | 155,00 | 252,31 |
| 25,32 | 9,97 | 9,86 | 30,04 | 42,18 | 144,40 | 236,27 |
| 21,35 | 8,46 | 8,86 | 25,40 | 35,81 | 133,67 | 219,89 |
| 18,20 | 7,29 | 8,06 | 21,68 | 30,67 | 123,05 | 203,52 |
| 15,67 | 6,36 | 7,41 | 18,70 | 26,51 | 112,80 | 187,54 |

## Weights and channel selection for air ducts with insulation

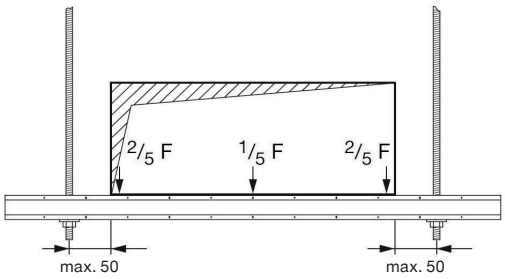


The permissible stress σD / γG/Q where γ = 1,4. σD results from the higher yield strength (point) resulting from cold forming as per EN 1993-1-3: 2010-12: σD = fyk / γM where γM = 1,1.

- Square ventilation ducts according to DIN EN 1505 (zinced, folded) with insulation (30mm aluminium laminated rock wool)
- The stated weights are approximate values. Note the specifications from the manufacturers.

**Channel selection table: weigth specification for mounting distance of 3,0m.**

- Weight in [kg / 3 m] calculated considering width/ height [mm] and sheet thickness [mm].
- Canal-connection Air duct connection parts (frame) are considered with a flat rate factor.

**Used limits are:**

- permissible stress capacity limit
- max allowable deflection of L /200
- lateral torsional buckling

**Table is in kg for spacing of 3m**

| Sheet 0,75 | | | Sheet 0,88 | | | | | | Sheet 1,0 | | | |
|---|---|---|---|---|---|---|---|---|---|---|---|---|
| 200 | 224 | 250 | 280 | 315 | 355 | 400 | 450 | 500 | 560 | 630 | 710 | 800 |
| 22,7 | 23,9 | 25,2 | 30,1 | 32,2 | 34,7 | 37,6 | 40,7 | 43,8 | 53,0 | 57,8 | 63,4 | 69,7 |
| | 25,1 | 26,4 | 31,6 | 33,7 | 36,3 | 39,1 | 42,2 | 45,3 | 54,6 | 59,5 | 65,1 | 71,3 |
| | | 27,7 | 33,2 | 35,4 | 37,9 | 40,7 | 43,8 | 47,0 | 56,4 | 61,3 | 66,9 | 73,2 |
| | | | 35,1 | 37,3 | 39,8 | 42,6 | 45,7 | 48,8 | 58,5 | 63,4 | 69,0 | 75,2 |
| | | | | 39,4 | 41,9 | 44,8 | 47,9 | 51,0 | 61,0 | 65,8 | 71,4 | 77,7 |
| | | | | | 44,5 | 47,3 | 50,4 | 53,5 | 63,8 | 68,6 | 74,2 | 80,5 |
| | | | | | | 50,1 | 53,2 | 56,3 | 66,9 | 71,8 | 77,3 | 83,6 |
| | | | | | | | 56,3 | 59,5 | 70,4 | 75,2 | 80,8 | 87,1 |
| | | | | | | | | 62,6 | 73,9 | 78,7 | 84,3 | 90,6 |
| | | | | | | | | | 78,0 | 82,9 | 88,5 | 94,8 |
| | | | | | | | | | | 87,8 | 93,4 | 99,6 |
| | | | | | | | | | | | 98,9 | 105,2 |
| | | | | | | | | | | | | 111,5 |

| | |
|---|---|
| | MT-10 |
| | MT-15 |
| | MT-30 |
| | MT-20 STANDING |
| | MT-40T |
| | MT-40 |
| | MT-50 |
| | MT-60 |
| | MT-40D |

| | | Sheet 1,13 | | | | | | Sheet 1,25 | | | | |
|---|---|---|---|---|---|---|---|---|---|---|---|---|
| 900 | 1000 | 1120 | 1250 | 1400 | 1600 | 1800 | 2000 | 2240 | 2500 | 2800 | 3150 | B/H |
| 76,6 | 83,6 | 102,1 | 112,1 | 123,7 | 139,2 | 154,7 | 170,1 | 234,7 | 259,7 | 288,5 | | 200 |
| 78,3 | 85,3 | 103,9 | 114,0 | 125,6 | 141,0 | 156,5 | 172,0 | 237,0 | 262,0 | 290,8 | | 224 |
| 80,1 | 87,1 | 105,9 | 116,0 | 127,6 | 143,1 | 158,5 | 174,0 | 239,5 | 264,5 | 293,3 | | 250 |
| 82,2 | 89,2 | 108,3 | 118,3 | 129,9 | 145,4 | 160,8 | 176,3 | 242,3 | 267,3 | 296,2 | | 280 |
| 84,7 | 91,6 | 111,0 | 121,0 | 132,6 | 148,1 | 163,6 | 179,0 | 245,7 | 270,7 | 299,6 | | 315 |
| 87,4 | 94,4 | 114,1 | 124,1 | 135,7 | 151,2 | 166,6 | 182,1 | 249,6 | 274,6 | 303,4 | | 355 |
| 90,6 | 97,5 | 117,5 | 127,6 | 139,2 | 154,7 | 170,1 | 185,6 | 253,9 | 278,9 | 307,7 | | 400 |
| 94,1 | 101,0 | 121,4 | 131,5 | 143,1 | 158,5 | 174,0 | 189,5 | 258,7 | 283,7 | 312,5 | | 450 |
| 97,5 | 104,5 | 125,3 | 135,3 | 146,9 | 162,4 | 177,9 | 193,3 | 263,5 | 288,5 | 317,4 | | 500 |
| 101,7 | 108,7 | 129,9 | 140,0 | 151,6 | 167,0 | 182,5 | 198,0 | 269,3 | 294,3 | 323,1 | | 560 |
| 106,6 | 113,6 | 135,3 | 145,4 | 157,0 | 172,4 | 187,9 | 203,4 | 276,0 | 301,0 | 329,9 | | 630 |
| 112,2 | 119,1 | 141,5 | 151,6 | 163,2 | 178,6 | 194,1 | 209,6 | 283,7 | 308,7 | 337,6 | | 710 |
| 118,4 | 125,4 | 148,5 | 158,5 | 170,1 | 185,6 | 201,1 | 216,5 | 292,4 | 317,4 | 346,2 | | 800 |
| 125,4 | 132,4 | 156,2 | 166,3 | 177,9 | 193,3 | 208,8 | 224,3 | 302,0 | 327,0 | 355,8 | | 900 |
| | 139,4 | 163,9 | 174,0 | 185,6 | 201,1 | 216,5 | 232,0 | 311,6 | 336,6 | 365,4 | | 1000 |
| | | 173,2 | 183,3 | 194,9 | 210,3 | 225,8 | 241,3 | 323,1 | 348,1 | | | 1120 |
| | | 183,3 | 193,3 | 204,9 | 220,4 | 235,9 | 251,3 | 335,6 | 360,6 | | | 1250 |
| | | 194,9 | 204,9 | 216,5 | 232,0 | 247,5 | 262,9 | 350,1 | 375,1 | | | 1400 |
| | | 210,3 | 220,4 | 232,0 | 247,5 | 262,9 | 278,4 | 369,3 | 394,3 | | | 1600 |
| | | 225,8 | 235,9 | 247,5 | 262,9 | 278,4 | 293,8 | 388,5 | 413,5 | | | 1800 |
| | | 241,3 | 251,3 | 262,9 | 278,4 | 293,8 | 309,3 | 407,8 | 432,8 | | | 2000 |
| | | 259,8 | 269,9 | 281,5 | 296,9 | 312,4 | 327,9 | 430,8 | 455,8 | | | 2240 |
| | | 279,9 | 290,0 | 301,6 | 317,0 | 332,5 | 348,0 | 455,8 | | | | 2500 |
| | | 303,1 | 313,2 | 324,8 | 340,2 | 355,7 | 371,2 | 484,7 | | | | 2800 |
| | | 330,2 | 340,2 | 351,8 | 367,3 | 382,8 | 398,2 | 518,3 | | | | 3150 |

## Ventilation

2

# Weights and channel selection for air ducts without insulation

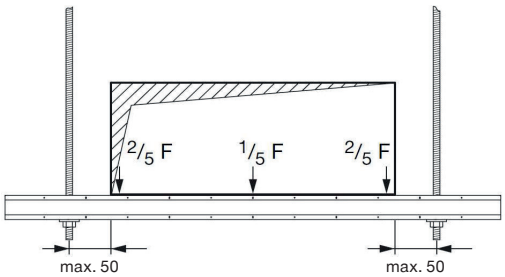


The permissible stress σD / γG/Q where γ = 1,4. σD results from the higher yield strength (point) resulting from cold forming as per EN 1993-1-3: 2010-12: σD = fyk / γM where γM = 1,1.
- Square ventilation ducts according to DIN EN 1505 (zinced, folded)
- The stated weights are approximate values. Note the specifications from the manufacturers.

**Channel selection table: wiegth specification for mounting distance of 3,0m.**
- Weight in [kg / 3 m] calculated considering width/ height [mm] and sheet thickness [mm].
- Canal-connection Air duct connection parts (frame) are considered with a flat rate factor.

**Used limits are:**
- permissible stress capacity limit
- max allowable deflection of L /200.
- lateral torsional buckling

**Table is in kg for spacing of 3m.**

| Sheet 0,75 | | | Sheet 0,88 | | | | | | Sheet 1,0 | | | |
|---|---|---|---|---|---|---|---|---|---|---|---|---|
| 200 | 224 | 250 | 280 | 315 | 355 | 400 | 450 | 500 | 560 | 630 | 710 | 800 |
| 18,4 | 19,3 | 20,3 | 24,9 | 26,7 | 28,8 | 31,1 | 33,7 | 36,3 | 44,7 | 48,9 | 53,6 | 58,9 |
| | 20,3 | 21,3 | 26,1 | 27,9 | 30,0 | 32,3 | 34,9 | 37,5 | 46,2 | 50,3 | 55,0 | 60,3 |
| | | 22,3 | 27,5 | 29,3 | 31,3 | 33,7 | 36,3 | 38,9 | 47,7 | 51,8 | 56,5 | 61,8 |
| | | | 29,0 | 30,8 | 32,9 | 35,2 | 37,8 | 40,4 | 49,5 | 53,6 | 58,3 | 63,6 |
| | | | | 32,6 | 34,7 | 37,0 | 39,6 | 42,2 | 51,5 | 55,6 | 60,3 | 65,6 |
| | | | | | 36,8 | 39,1 | 41,7 | 44,3 | 53,9 | 58,0 | 62,7 | 68,0 |
| | | | | | | 41,4 | 44,0 | 46,6 | 56,5 | 60,6 | 65,4 | 70,7 |
| | | | | | | | 46,6 | 49,2 | 59,5 | 63,6 | 68,3 | 73,6 |
| | | | | | | | | 51,8 | 62,4 | 66,5 | 71,2 | 76,5 |
| | | | | | | | | | 65,9 | 70,1 | 74,8 | 80,1 |
| | | | | | | | | | | 74,2 | 78,9 | 84,2 |
| | | | | | | | | | | | 83,6 | 88,9 |
| | | | | | | | | | | | | 94,2 |

| | |
|---|---|
| | MT-10 |
| | MT-15 |
| | MT-30 |
| | MT-20 STANDING |
| | MT-40T |
| | MT-40 |
| | MT-50 |
| | MT-60 |
| | MT-40D |

| | | Sheet 1,13 | | | | | | Sheet 1,25 | | | | |
|---|---|---|---|---|---|---|---|---|---|---|---|---|
| 900 | 1000 | 1120 | 1250 | 1400 | 1600 | 1800 | 2000 | 2240 | 2500 | 2800 | 3150 | B/H |
| 64,8 | 70,7 | 87,8 | 96,5 | 106,4 | 119,8 | 133,1 | 146,4 | 208,3 | 230,5 | 256,1 | 286,0 | 200 |
| 66,2 | 72,1 | 89,4 | 98,1 | 108,0 | 121,3 | 134,7 | 148,0 | 210,3 | 232,5 | 258,2 | 288,0 | 224 |
| 67,7 | 73,6 | 91,1 | 99,8 | 109,8 | 123,1 | 136,4 | 149,7 | 212,6 | 234,8 | 260,4 | 290,3 | 250 |
| 69,5 | 75,4 | 93,1 | 101,8 | 111,8 | 125,1 | 138,4 | 151,7 | 215,1 | 237,3 | 262,9 | 292,8 | 280 |
| 71,5 | 77,4 | 95,5 | 104,1 | 114,1 | 127,4 | 140,7 | 154,0 | 218,1 | 240,3 | 265,9 | | 315 |
| 73,9 | 79,8 | 98,1 | 106,8 | 116,8 | 130,1 | 143,4 | 156,7 | 221,5 | 243,7 | 269,3 | | 355 |
| 76,5 | 82,4 | 101,1 | 109,8 | 119,8 | 133,1 | 146,4 | 159,7 | 225,4 | 247,6 | 273,2 | | 400 |
| 79,5 | 85,4 | 104,5 | 113,1 | 123,1 | 136,4 | 149,7 | 163,0 | 229,6 | 251,8 | 277,4 | | 450 |
| 82,4 | 88,3 | 107,8 | 116,4 | 126,4 | 139,7 | 153,0 | 166,3 | 233,9 | 256,1 | 281,7 | | 500 |
| 86,0 | 91,8 | 111,8 | 120,4 | 130,4 | 143,7 | 157,0 | 170,3 | 239,0 | 261,2 | 286,8 | | 560 |
| 90,1 | 96,0 | 116,4 | 125,1 | 135,1 | 148,4 | 161,7 | 175,0 | 245,0 | 267,2 | 292,8 | | 630 |
| 94,8 | 100,7 | 121,7 | 130,4 | 140,4 | 153,7 | 167,0 | 180,3 | 251,8 | 274,0 | 299,6 | | 710 |
| 100,1 | 106,0 | 127,7 | 136,4 | 146,4 | 159,7 | 173,0 | 186,3 | 259,5 | 281,7 | 307,3 | | 800 |
| 106,0 | 111,9 | 134,4 | 143,0 | 153,0 | 166,3 | 179,6 | 192,9 | 268,1 | 290,3 | 315,9 | | 900 |
| | 117,8 | 141,0 | 149,7 | 159,7 | 173,0 | 186,3 | 199,6 | 276,6 | 298,8 | 324,4 | | 1000 |
| | | 149,0 | 157,7 | 167,7 | 181,0 | 194,3 | 207,6 | 286,8 | 309,0 | 334,6 | | 1120 |
| | | 157,7 | 166,3 | 176,3 | 189,6 | 202,9 | 216,2 | 297,9 | 320,1 | 345,7 | | 1250 |
| | | 167,7 | 176,3 | 186,3 | 199,6 | 212,9 | 226,2 | 310,7 | 332,9 | 358,5 | | 1400 |
| | | 181,0 | 189,6 | 199,6 | 212,9 | 226,2 | 239,5 | 327,8 | 350,0 | | | 1600 |
| | | 194,3 | 202,9 | 212,9 | 226,2 | 239,5 | 252,8 | 344,9 | 367,1 | | | 1800 |
| | | 207,6 | 216,2 | 226,2 | 239,5 | 252,8 | 266,1 | 362,0 | 384,2 | | | 2000 |
| | | 223,5 | 232,2 | 242,2 | 255,5 | 268,8 | 282,1 | 382,5 | 404,6 | | | 2240 |
| | | 240,8 | 249,5 | 259,5 | 272,8 | 286,1 | 299,4 | 404,6 | 426,8 | | | 2500 |
| | | 260,8 | 269,4 | 279,4 | 292,7 | 306,0 | 319,3 | 430,3 | 452,5 | | | 2800 |
| | | 284,1 | 292,7 | 302,7 | 316,0 | 329,3 | 342,6 | 460,1 | | | | 3150 |

# MT Brackets

3

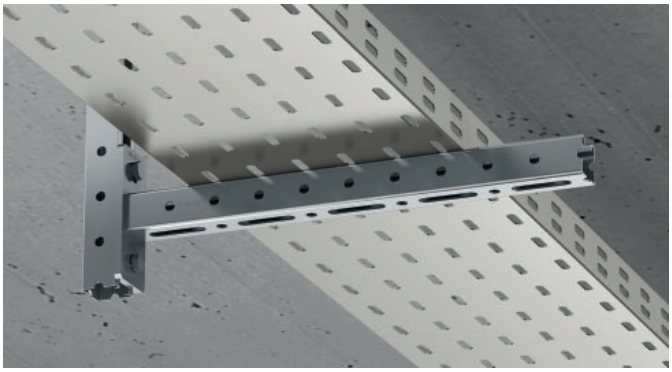

## Applications

- Supporting pipe rings, ventilation ducts, cable trays and other MEP support hardware
- Mounting light-duty MEP installations on concrete and steel
- Suitable for use in dry, indoor environments

## Advantages

- Part of the Hilti MT system – an economical, all-in-one solution for virtually all modular MEP support structures
- Economical – high load/weight ratio and rapid assembly make MT strut channel a more efficient alternative to welded MEP support structures
- Easy to install – compatible with the Hilti MT Twist-Lock, a faster alternative to spring nuts for assembling a modular support system

## Technical data

| | |
|---|---|
| **Material composition** | Q235 or better steel |
| **Surface finish** | Pre-galvanized - for dry indoor use only |

### MT-BR-30 300 / 450 Bracket

| Order designation | Technical data | Sales pack quantity | Item number | |
|---|---|---|---|---|
| **MT-BR-30 300** | Dry indoor conditions (C1) Indoor with temporary condensation (C2) | 12 pc | **2271288** | 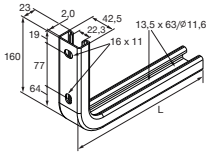  |
| **MT-BR-30 450** | | 16 pc | **2271440** | |

### MT-BR-40 300 / 450 / 600 / 1000 Bracket

| Order designation | Technical data | Sales pack quantity | Item number | |
|---|---|---|---|---|
| **MT-BR-40 300** | Dry indoor conditions (C1) Indoor with temporary condensation (C2) | 10 pc | **2271442** | 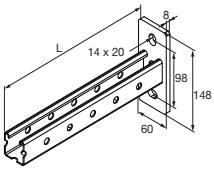  |
| **MT-BR-40 450** | | 10 pc | **2271444** | |
| **MT-BR-40 600** | | 10 pc | **2271451** | |
| **MT-BR-40 1000** | | 10 pc | **2271446** | |

### MT-BR-40D 600 / 1000 Bracket

| Order designation | Technical data | Sales pack quantity | Item number | |
|---|---|---|---|---|
| **MT-BR-40D 600** | Dry indoor conditions (C1) Indoor with temporary condensation (C2) | 6 pc | **2271448** | 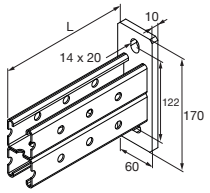  |
| **MT-BR-40D1000** | | 6 pc | **2271450** | |

# MT Brackets - Outdoor

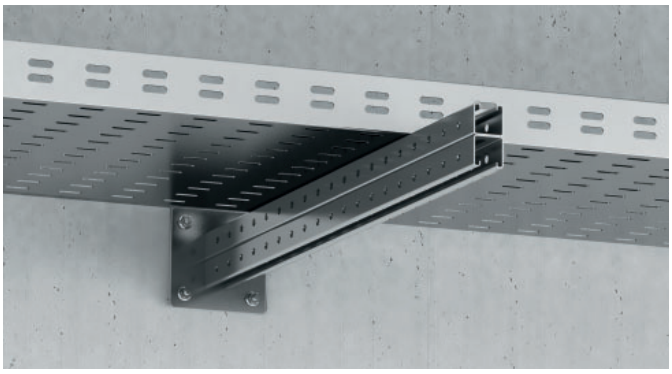

## Applications

- Supporting pipe rings, ventilation ducts, cable trays and other MEP support hardware
- Mounting light-duty MEP installations on concrete and steel
- Suitable for use in moderately corrosive environments

## Advantages

- Part of the Hilti MT system – an economical, all-in-one solution for virtually all modular MEP support structures
- Economical – high load/weight ratio and rapid assembly make MT strut channel a more efficient alternative to welded MEP support structures
- Easy to install – compatible with the Hilti MT Twist-Lock for assembling a modular support system
- Comes also with four anchorage holes versions for enhanced resistance against lateral forces

## Technical data

| | |
|---|---|
| **Material composition** | Q235 or better steel |
| **Surface finish** | Hot-dip galvanized (56 µm ASTM A153M) for outdoor use |

## MT-BR-30 300 / 450 OC Bracket - Outdoor

| Order designation | Technical data | Sales pack quantity | Item number | |
|---|---|---|---|---|
| **MT-BR-30 300 OC** | Outdoor, low to moderate pollution (C3 / C4 - low) | 12 pc | **2271289** | 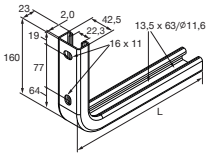  |
| **MT-BR-30 450 OC** | | 16 pc | **2271441** | |

# MT Brackets - Outdoor

3

## MT-BR-40 300 / 450 / 600 / 1000 OC Bracket - Outdoor

| Order designation | Technical data | Sales pack quantity | Item number | |
|---|---|---|---|---|
| **MT-BR-40 300 OC** | Outdoor, low to moderate pollution (C3 / C4 - low) | 10 pc | **2271443** | 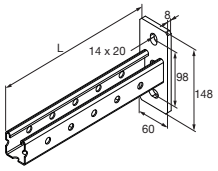  |
| **MT-BR-40 450 OC** | | 10 pc | **2271445** | |
| **MT-BR-40 600 OC** | | 10 pc | **2271452** | |
| **MT-BR-40 1000 OC** | | 10 pc | **2271447** | |

## MT-BR-40 O4 600 / 1000 OC Bracket - Outdoor

| Order designation | Technical data | Sales pack quantity | Item number | |
|---|---|---|---|---|
| **MT-BR-40 O4 600 OC** | Outdoor, low to moderate pollution (C3 / C4 - low) | 4 pc | **2271455** | 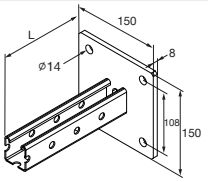  |
| **MT-BR-40 O4 1000 OC** | | 4 pc | **2271456** | |

## MT-BR-40D 600 / 1000 OC Bracket - Outdoor

| Order designation | Technical data | Sales pack quantity | Item number | |
|---|---|---|---|---|
| **MT-BR-40D 600** | Outdoor, low to moderate pollution (C3 / C4 - low) | 6 pc | **2271449** | 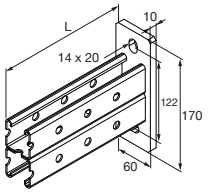  |
| **MT-BR-40D1000** | | 6 pc | **2271453** | |

## MT-BR-40D O4 600 / 1000 / 1500 OC Bracket - Outdoor

| Order designation | Technical data | Sales pack quantity | Item number | |
|---|---|---|---|---|
| **MT-BR-40D O4 600 OC** | Outdoor, low to moderate pollution (C3 / C4 - low) | 4 pc | **2271459** | 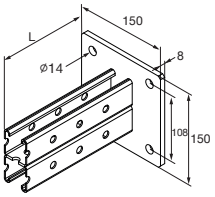  |
| **MT-BR-40D O4 1000 OC** | | 4 pc | **2271461** | |
| **MT-BR-40D O4 1500 OC** | | 2 pc | **2271287** | |

# MT Brackets - Outdoor

## **Technical data** for brackets (Hot-dip galvanized)

| | | $F_1 = q \cdot i$ | $F_1$ (½ ½) | $F_1$ | $F_2$ $F_2$ (⅓ ⅓ ⅓) | $F_3$ $F_3$ $F_3$ (¼ ¼ ¼ ¼) |
|---|---|---|---|---|---|---|
| | | **HST3 M10 / HUS3-H / HUS4-H 8** | **HST3 M10 / HUS3-H / HUS4-H 8** | **HST3 M10 / HUS3-H / HUS4-H 8** | **HST3 M10 / HUS3-H / HUS4-H 8** | **HST3 M10 / HUS3-H / HUS4-H 8** |
| **Bracket without bracing** | **L** | **F1** | **F1** | **F1** | **F2** | **F3** |
| | **[mm]** | **N** | **N** | **N** | **N** | **N** |
| MT-BR-30/300 / OC | 300 | 549 | 549 | 362 | 274 | 183 |
| MT-BR-30/450 / OC | 450 | 433 | 433 | 249 | 217 | 144 |

## **Technical data** for brackets (Hot-dip galvanized)

| | | $F_1 = q \cdot i$ | $F_1$ (½ ½) | $F_1$ | $F_2$ $F_2$ (⅓ ⅓ ⅓) | $F_3$ $F_3$ $F_3$ (¼ ¼ ¼ ¼) |
|---|---|---|---|---|---|---|
| | | **HST3 M12 / HUS3-H / HUS4-H** | **HST3 M12 / HUS3-H / HUS4-H** | **HST3 M12 / HUS3-H / HUS4-H** | **HST3 M12 / HUS3-H / HUS4-H** | **HST3 M12 / HUS3-H / HUS4-H** |
| **Bracket without bracing** | **L** | **F1** | **F1** | **F1** | **F2** | **F3** |
| | **[mm]** | **N** | **N** | **N** | **N** | **N** |
| MT-BR-40/300 / OC | 300 | 2491 | 2491 | 1568 | 1246 | 830 |
| MT-BR-40/450 / OC | 450 | 1921 | 1921 | 1142 | 960 | 640 |
| MT-BR-40/600 / OC | 600 | 1561 | 1561 | 669 | 781 | 520 |
| MT-BR-40/1000 / OC | 1000 | 629 | 755 | 236 | 354 | 229 |
| MT-BR-40 O4/600 OC | 600 | 1416 | 1416 | 669 | 708 | 472 |
| MT-BR-40 O4/1000 OC | 1000 | 629 | 755 | 236 | 354 | 229 |
| MT-BR-40D/600 / OC | 600 | 2428 | 2428 | 1365 | 1214 | 809 |
| MT-BR-40D/1000 / OC | 1000 | 1579 | 1579 | 851 | 789 | 526 |
| MT-BR-40D O4/600 OC | 600 | 3511 | 3511 | 2035 | 1755 | 1170 |
| MT-BR-40D O4/1000 OC | 1000 | 2347 | 2347 | 1246 | 1174 | 782 |
| MT-BR-40D O4/1500 OC | 1500 | 1441 | 1642 | 540 | 810 | 524 |

## Design resistance

anchors HST3 M12 with anchorage depth of hef=70mm
anchors HST3 M10 with anchorage depth of hef=60mm
anchors HUS3H 10 with anchorage depth of hef=67mm
anchors HUS3H 8 with anchorage depth of hef=55mm
cracked concrete ³ C20/25
anchor resistance based on infinite edge distance
all holes must be filled with Hilti HIT-HY dynamic set
all ancors must work for shear, therefore holes must be filled with Hilti HIT-HY dynamic set
maximum deflection of L/150 considered
self weight of channel considered

# MT Open C-channel (Strut) Connectors

## 90° Connectors

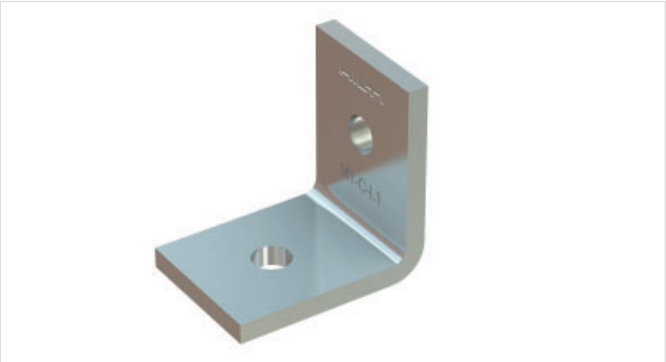

## Applications

- Right-angle connections between any MT profiles
- Assembling 2D metal framing for MEP support structures with light loads
- Suitable for use in dry, indoor environments

## Technical data

| | |
|---|---|
| **Material composition** | see detailed table |
| **Surface finish** | Pre-galvanized - for dry indoor use only |

## Advantages

- Part of the Hilti MT system – an economical, all-in-one solution for virtually all modular MEP support structures
- Easy to install – compatible with the Hilti MT Twist-Lock, a faster alternative to spring nuts for assembling a modular support system
- Adaptable – unlike welding, angle brackets allow you to modify strut channel framing during installation and for future MEP requirements
- MT-C-T 3D connectors provide 3D frame possibilities
- MT-C-T/1 provides an alternative to using vertical double channels
- MT-C-T A has a threaded hole on its short face, enabling the easy fixation of C-channels through the backside using a MT-CTAB bolt

## MT-C-L1 Connector

| Order Designation | Material composition | Technical data | Sales pack quantity | Item number | |
|---|---|---|---|---|---|
| **MT-C-L1** | Q355 or better steel | Dry indoor conditions (C1) Indoor with temporary condensation (C2) | 20 pc | **2271514** | 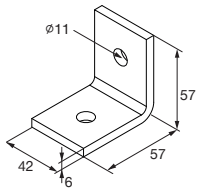  |

## MT-C-L2 Connector

| Order Designation | Material composition | Technical data | Sales pack quantity | Item number | |
|---|---|---|---|---|---|
| **MT-C-L2** | Q355 or better steel | Dry indoor conditions (C1) Indoor with temporary condensation (C2) | 20 pc | **2271518** | 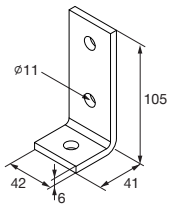  |

# MT Open C-channel (Strut) Connectors
90° Connectors

## MT-C-LL1 Connector

| Order Designation | Material composition | Technical data | Sales pack quantity | Item number | |
|---|---|---|---|---|---|
| **MT-C-LL1** | Q355 or better steel | Dry indoor conditions (C1) Indoor with temporary condensation (C2) | 10 pc | **2272047** | 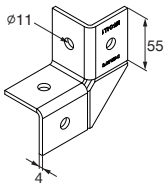  |

## MT-C-LL2 Connector

| Order Designation | Material composition | Technical data | Sales pack quantity | Item number | |
|---|---|---|---|---|---|
| **MT-C-LL2** | Q355 or better steel | Dry indoor conditions (C1) Indoor with temporary condensation (C2) | 10 pc | **2272051** | 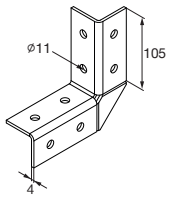  |

## MT-C-T/2 Connector

| Order Designation | Material composition | Technical data | Sales pack quantity | Item number | |
|---|---|---|---|---|---|
| **MT-C-T/2** | Q355 or better steel | Dry indoor conditions (C1) Indoor with temporary condensation (C2) | 15 pc | **2272054** | 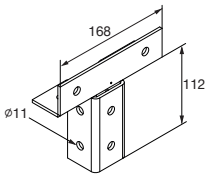  |

## MT-C-T A Connector

| Order Designation | Material composition | Technical data | Sales pack quantity | Item number | |
|---|---|---|---|---|---|
| **MT-C-T A** | Q355 or better steel | Dry indoor conditions (C1) Indoor with temporary condensation (C2) | 20 pc | **2272056** | 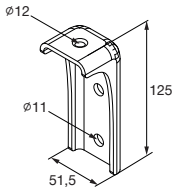  |

4

# MT Open C-channel (Strut) Connectors

## 90° Connectors

### MT-C-T/1 Connector

| Order Designation | Material composition | Technical data | Sales pack quantity | Item number | |
|---|---|---|---|---|---|
| **MT-C-T/1** | Q355 or better steel | Dry indoor conditions (C1) Indoor with temporary condensation (C2) | 20 pc | **2272040** | 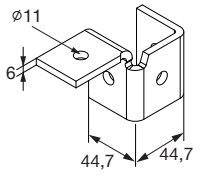  |

### MT-C-T 3D/2 Connector

| Order Designation | Material composition | Technical data | Sales pack quantity | Item number | |
|---|---|---|---|---|---|
| **MT-C-T 3D/2** | Q355 or better steel | Dry indoor conditions (C1) Indoor with temporary condensation (C2) | 10 pc | **2272058** | 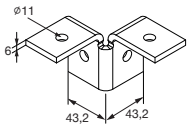  |

### MT-C-T 3D/3 Connector

| Order Designation | Material composition | Technical data | Sales pack quantity | Item number | |
|---|---|---|---|---|---|
| **MT-C-T 3D/3** | Q355 or better steel | Dry indoor conditions (C1) Indoor with temporary condensation (C2) | 10 pc | **2272060** | 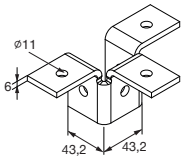  |

# MT Open C-channel (Strut) Connectors

## 90° Connectors - Outdoor

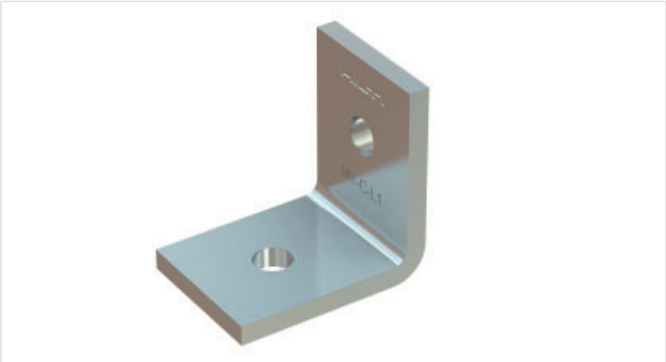

## Applications

- Right-angle connections between any MT profiles
- Assembling 2D metal framing for MEP support structures with light loads
- Suitable for use in moderately corrosive environments

## Technical data

| | |
|---|---|
| **Material composition** | Q355 or better steel |
| **Surface finish** | Hot-dip galvanized - for outdoor use |

## Advantages

- Part of the Hilti MT system – an economical, all-in-one solution for virtually all modular MEP support structures
- Easy to install – compatible with the Hilti MT Twist-Lock, a faster alternative to spring nuts for assembling a modular support system
- Adaptable – unlike welding, angle brackets allow you to modify strut channel framing during installation and for future MEP requirements
- MT-C-T 3D connectors provide 3D frame possibilities
- MT-C-T/1 provides an alternative to using vertical double channels
- MT-C-T A has a threaded hole on its short face, enabling the easy fixation of C-channels through the backside using a MT-CTAB bolt

### MT-C-L1 OC Connector - Outdoor

| Order Designation | Material composition | Technical data | Sales pack quantity | Item number | |
|---|---|---|---|---|---|
| **MT-C-L1 OC** | Q355 or better steel | Outdoor, low to moderate pollution (C3 / C4 - low) | 20 pc | **2271516** | 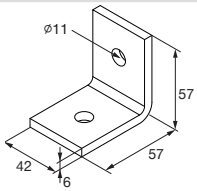  |

### MT-C-L2 OC Connector - Outdoor

| Order Designation | Material composition | Technical data | Sales pack quantity | Item number | |
|---|---|---|---|---|---|
| **MT-C-L2 OC** | Q355 or better steel | Outdoor, low to moderate pollution (C3 / C4 - low) | 20 pc | **2271519** | 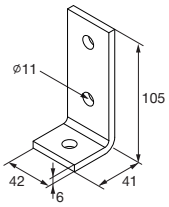  |

# MT Open C-channel (Strut) Connectors

90° Connectors - Outdoor

4

## MT-C-LL1 OC Connector - Outdoor

| Order Designation | Material composition | Technical data | Sales pack quantity | Item number | |
|---|---|---|---|---|---|
| **MT-C-LL1 OC** | Q355 or better steel | Outdoor, low to moderate pollution (C3 / C4 - low) | 10 pc | **2272049** | 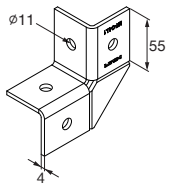 |

## MT-C-LL2 OC Connector - Outdoor

| Order Designation | Material composition | Technical data | Sales pack quantity | Item number | |
|---|---|---|---|---|---|
| **MT-C-LL2 OC** | Q355 or better steel | Outdoor, low to moderate pollution (C3 / C4 - low) | 10 pc | **2272053** | 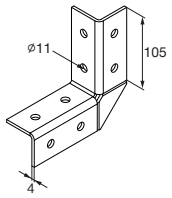 |

## MT-C-T/2 OC Connector - Outdoor

| Order Designation | Material composition | Technical data | Sales pack quantity | Item number | |
|---|---|---|---|---|---|
| **MT-C-T/2 OC** | Q355 or better steel | Outdoor, low to moderate pollution (C3 / C4 - low) | 15 pc | **2272055** | 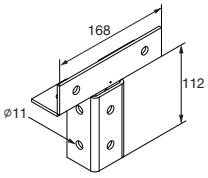 |

## MT-C-T A OC Connector - Outdoor

| Order Designation | Material composition | Technical data | Sales pack quantity | Item number | |
|---|---|---|---|---|---|
| **MT-C-T A OC** | Q355 or better steel | Outdoor, low to moderate pollution (C3 / C4 - low) | 20 pc | **2272057** | 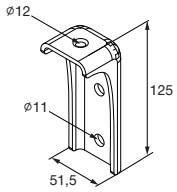 |

## MT-C-T/1 OC Connector - Outdoor

| Order Designation | Material composition | Technical data | Sales pack quantity | Item number | |
|---|---|---|---|---|---|
| **MT-C-T/1 OC** | Q355 or better steel | Outdoor, low to moderate pollution (C3 / C4 - low) | 20 pc | **2272042** | 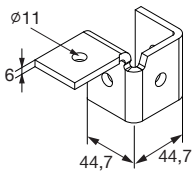 |

# MT Open C-channel (Strut) Connectors

## MT-C-T 3D/2 OC Connector - Outdoor

| Order Designation | Material composition | Technical data | Sales pack quantity | Item number | |
|---|---|---|---|---|---|
| **MT-C-T 3D/2 OC** | Q355 or better steel | Outdoor, low to moderate pollution (C3 / C4 - low) | 10 pc | **2272059** | 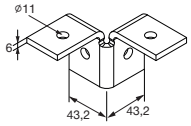  |

## MT-C-T 3D/3 OC Connector - Outdoor

| Order Designation | Material composition | Technical data | Sales pack quantity | Item number | |
|---|---|---|---|---|---|
| **MT-C-T 3D/3 OC** | Q355 or better steel | Outdoor, low to moderate pollution (C3 / C4 - low) | 10 pc | **2272061** | 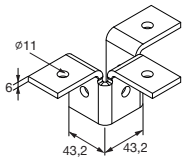  |

## Technical data Connector

| Item image | Load drawing | Order Designation | + Fz | - Fz | ± Fx | ± Fy |
|---|---|---|---|---|---|---|
|  | 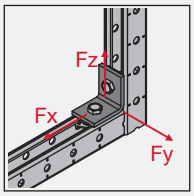  | **MT-C-L1 / MT-C-L1 OC** | 4,0 kN | 3,3 kN | 3,3 kN | - |
|  | 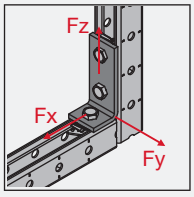  | **MT-C-L2 / MT-C-L2 OC** | 8,8 kN | 5,7 kN | 2,8 kN | 1,1 kN |
|  | 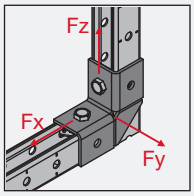  | **MT-C-LL1 / MT-C-LL1 OC** | 5,9 kN | 5,8 kN | 5,8 kN | 0,9 kN |
|  | 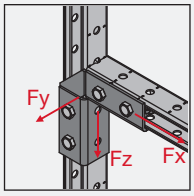  | **MT-C-LL2 / MT-C-LL2 OC** | 4,6 kN | 4,1 kN | 4,1 kN | 0,6 kN |

**Design note**
- Shown load values are recommended values with partial safety factors for actions and resistance included
- Design value = 1.4 * recommended value
- The design resistance of the products is defined in accordance with EN1993

4

# MT Open C-channel (Strut) Connectors

## 90° Connectors

### Technical data Connector

| Item image | Load drawing | Order Designation | + Fz | - Fz | ± Fx | ± Fy |
|---|---|---|---|---|---|---|
|  | 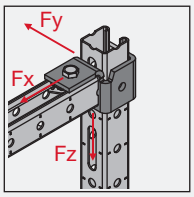  | **MT-C-T/1 / MT-C-T/1 OC** | 2,8 kN | 3,9 kN | 4,6 kN | 0,9 kN |
|  | 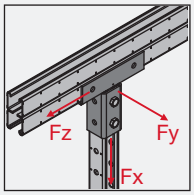  | **MT-C-T/2 / MT-C-T/2 OC** | 2,6 kN | 2,6 kN | 8,1 kN | 1,1 kN |
|  | 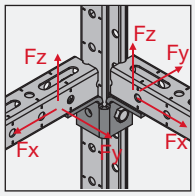  | **MT-C-T 3D/2 / MT-C-T 3D/2 OC** | 2,6 kN | 1,5 kN | 1,6 kN | 0,5 kN |
|  | 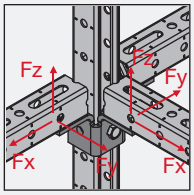  | **MT-C-T 3D/3 / MT-C-T 3D/3 OC** | 2,2 kN | 2,2 kN | 3,6 kN | 0,8 kN |
|  | 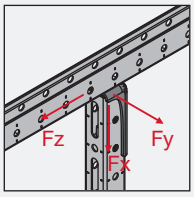  | **MT-C-T A / MT-C-T A OC** | 2,0 kN | 2,0 kN | 6,3 kN | 2,0 kN |

**Design note**
- Shown load values are recommended values with partial safety factors for actions and resistance included
- Design value = 1.4 * recommended value
- The design resistance of the products is defined in accordance with EN1993

# MT Open C-channel (Strut) Connectors

## 90° Connectors

### Operation Instruction

MT-C-L1 / MT-C-L1 OC

2288322-06.2020

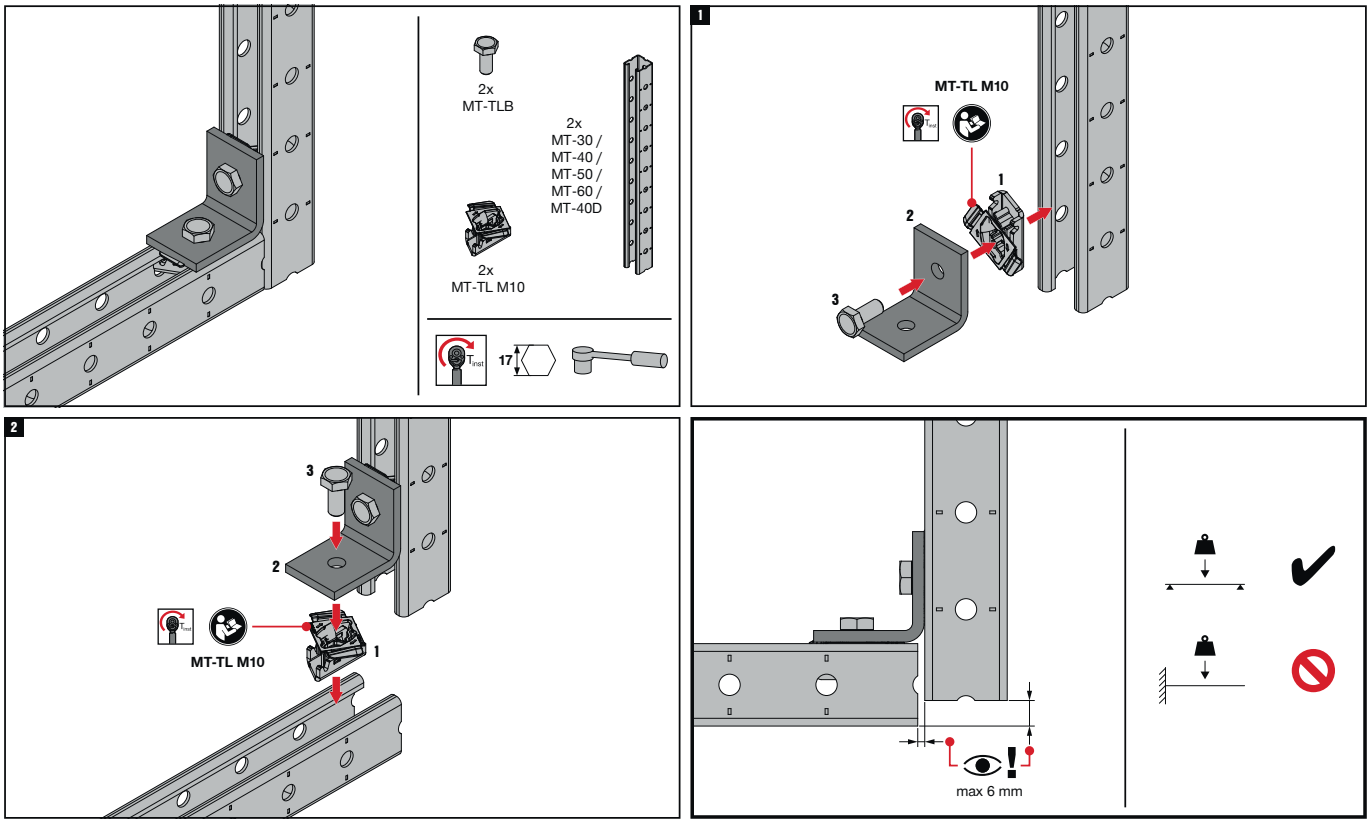


The latest IFU (Instruction For Use) is available on Hilti Online. Please check for any revisions before installing the product.

## MT-C-L2 / MT-C-L2 OC

2288323-07.2020

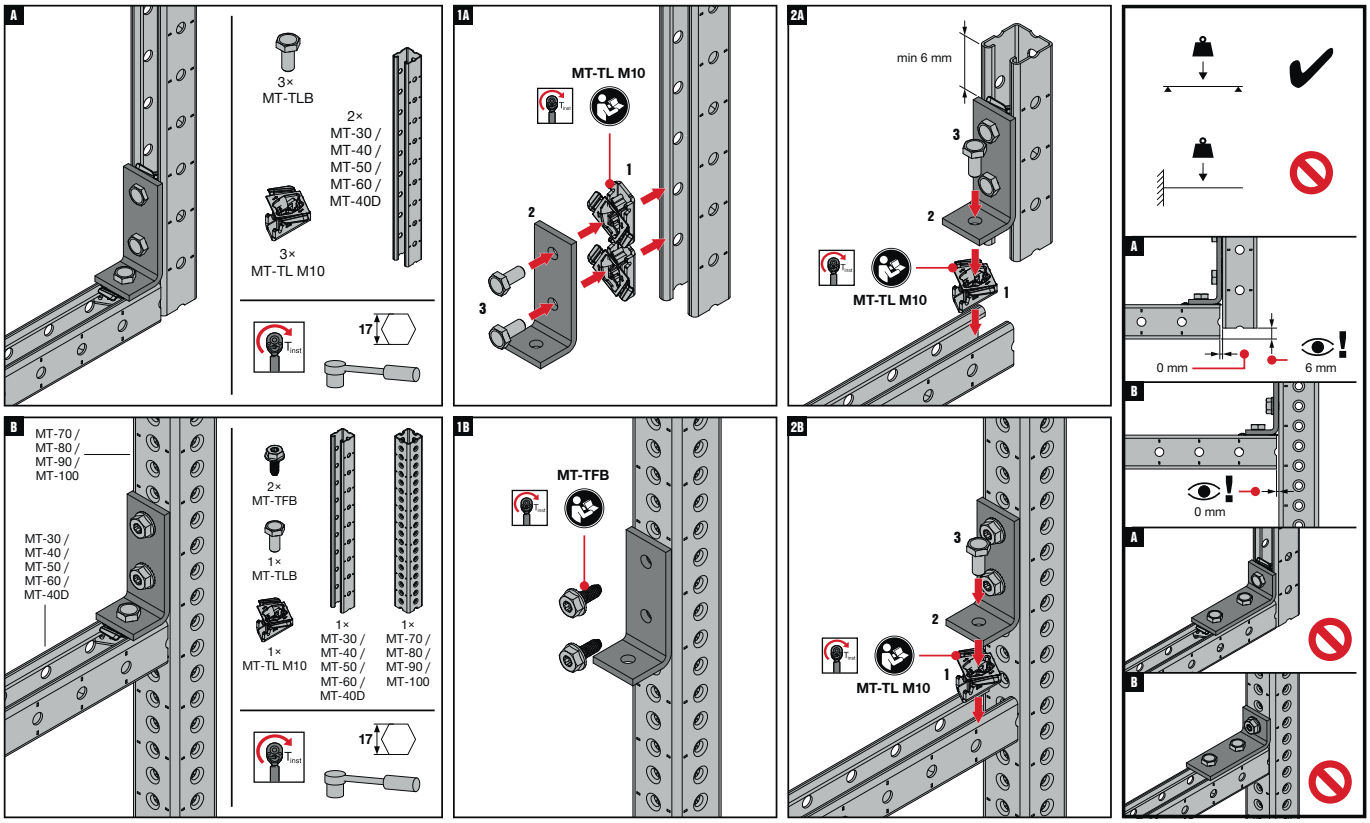


The latest IFU (Instruction For Use) is available on Hilti Online. Please check for any revisions before installing the product.

4

# MT Open C-channel (Strut) Connectors

## 90° Connectors

### Operation Instruction

MT-C-LL1 / MT-C-LL1 OC

2288324-09.2020

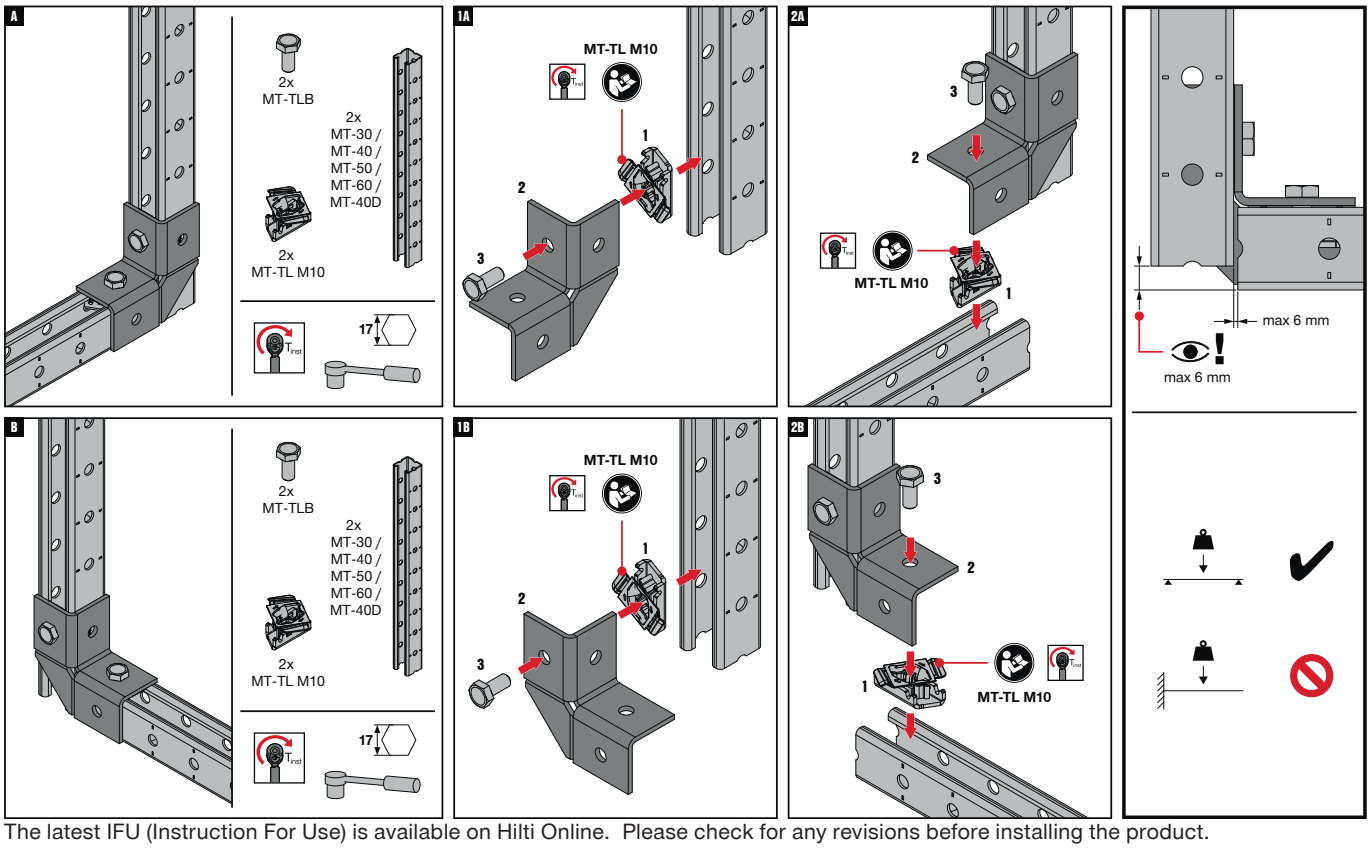


The latest IFU (Instruction For Use) is available on Hilti Online. Please check for any revisions before installing the product.

MT-C-LL2 / MT-C-LL2 OC

2288325-06.2020

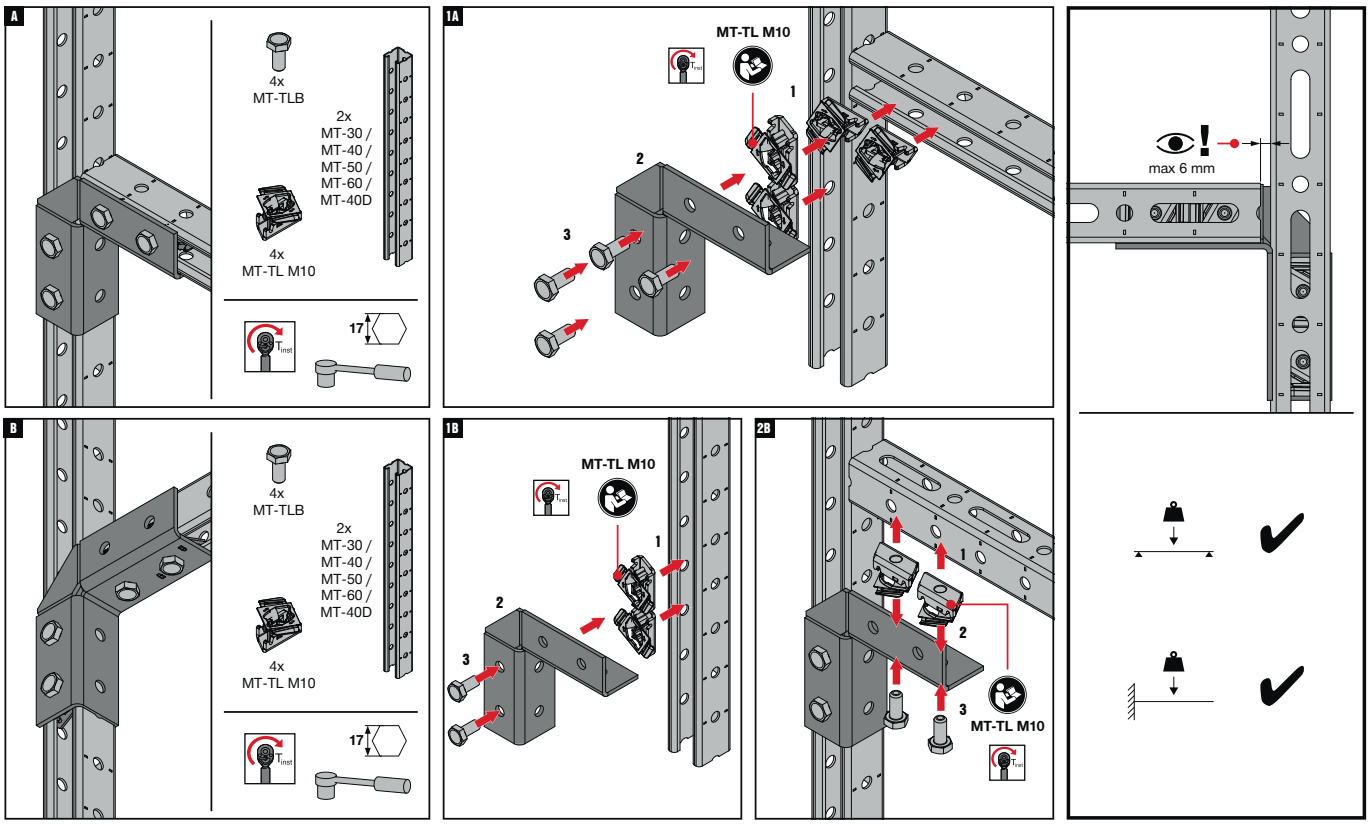


The latest IFU (Instruction For Use) is available on Hilti Online. Please check for any revisions before installing the product.

# MT Open C-channel (Strut) Connectors
Channel Ties

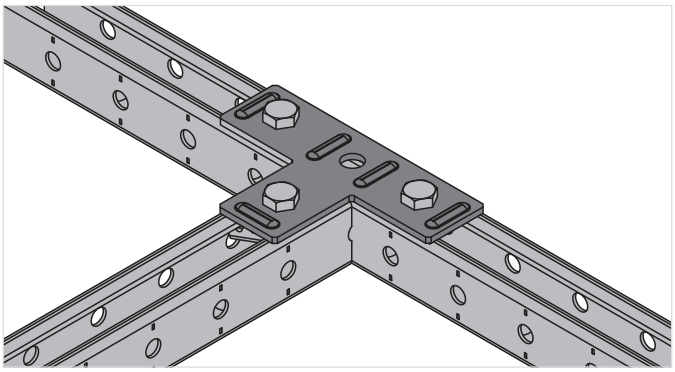

## Applications

- Connecting two MT strut channels together
- Compatible with multiple MT strut channels
- Suitable for use in dry, indoor environments

## Advantages

- Adjustable – easily fit and repositioned along strut channels
- Compatible with Twist-Lock channel connectors – for much faster, adaptable assembly

## Technical data

| | |
|---|---|
| **Material composition** | Q235 or better steel |
| **Surface finish** | Indoor Coated - Electro galvanized |

## MT-CT-H2 Channel Tie

| Order Designation | Technical data | Sales pack quantity | Item number | |
|---|---|---|---|---|
| **MT-CT-H2** | Dry indoor conditions (C1) Indoor with temporary condensation (C2) | 15 pc | **2322405** | 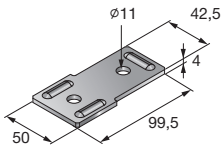  |

## MT-CT-H4 Channel Tie

| Order Designation | Technical data | Sales pack quantity | Item number | |
|---|---|---|---|---|
| **MT-CT-H4** | Dry indoor conditions (C1) Indoor with temporary condensation (C2) | 15 pc | **2322408** | 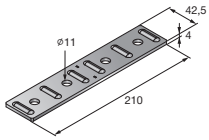  |

# MT Open C-channel (Strut) Connectors
Channel Ties



## MT-CT-H5 Channel Tie

| Order Designation | Technical data | Sales pack quantity | Item number | |
|---|---|---|---|---|
| **MT-CT-H5** | Dry indoor conditions (C1) Indoor with temporary condensation (C2) | 8 pc | **2322406** | 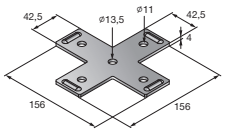 |

## MT-CT-T Channel Tie

| Order Designation | Technical data | Sales pack quantity | Item number | |
|---|---|---|---|---|
| **MT-CT-T** | Dry indoor conditions (C1) Indoor with temporary condensation (C2) | 12 pc | **2322407** | 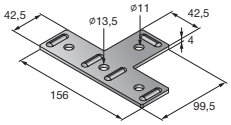 |

# MT Open C-channel (Strut) Connectors

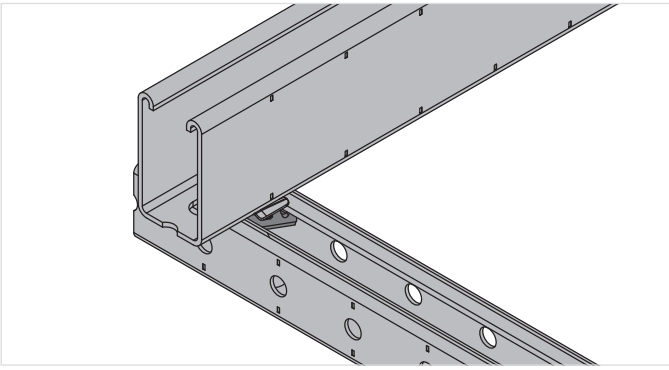

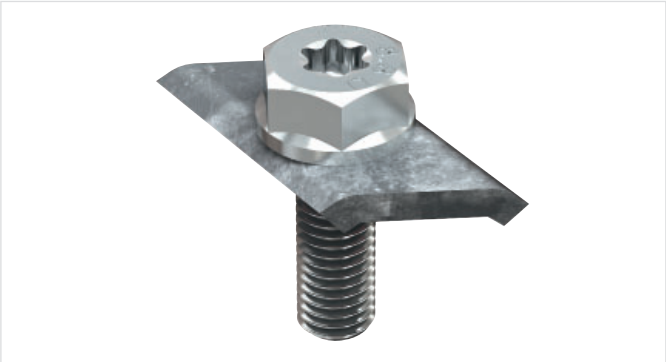

## Applications

- Fastening horizontal MT strut channel to vertical MT closed profiles, such as for integrated raised floors in data centers
- Suitable for use in dry, indoor environments

## Advantages

- Part of the Hilti MT system – an economical, all-in-one solution for virtually all modular MEP support structures
- To be used with the MT-C-T A connector

## Technical data

| | |
|---|---|
| **Material composition** | see detailed table |
| **Surface finish** | see detailed table |

## MT-C-T A Connector

| Order Designation | Material composition | Surface finish | Technical data | Sales pack quantity | Item number | |
|---|---|---|---|---|---|---|
| **MT-C-T A** | Q355 or better steel | Pre-galvanized - for dry indoor use only | Dry indoor conditions (C1) Indoor with temporary condensation (C2) | 20 pc | **2272056** | 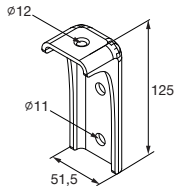  |

## MT-CTAB Connector Bolt

| Order Designation | Material composition | Surface finish | Technical data | Sales pack quantity | Item number | |
|---|---|---|---|---|---|---|
| **MT-CTAB** | Q355 or better steel | Indoor Coated - Electro galvanized | Dry indoor conditions (C1) Indoor with temporary condensation (C2) | 100pc | **2332797** | 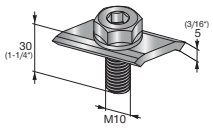  |

4

# MT Open C-channel (Strut) Connectors - Outdoor

## Channel Ties

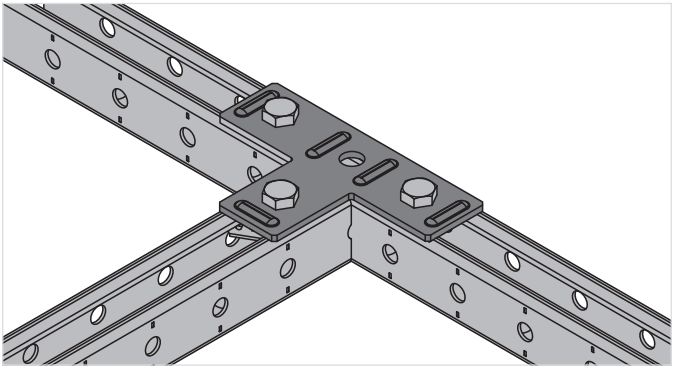

## Applications

- Connecting two MT strut channels together
- Suitable for use in moderately corrosive environments

## Advantages

- Adjustable – easily fit and repositioned along strut channels
- Compatible with Twist-Lock channel connectors – for much faster, adaptable assembly

## Technical data

| | |
|---|---|
| **Material composition** | Q235 or better steel |
| **Surface finish** | Outdoor Coated - HDG |

### MT-CT-H2 OC Channel Tie - Outdoor

| Order Designation | Technical Data | Sales pack quantity | Item number | |
|---|---|---|---|---|
| **MT-CT-H2 OC** | Outdoor, low to moderate pollution (C3 / C4 - low) | 15 pc | **2322409** | 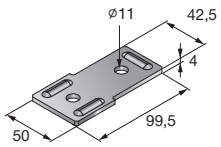  |

### MT-CT_H4 OC Channel Tie - Outdoor

| Order Designation | Technical Data | Sales pack quantity | Item number | |
|---|---|---|---|---|
| **MT-CT-H4 OC** | Outdoor, low to moderate pollution (C3 / C4 - low) | 15 pc | **2322412** | 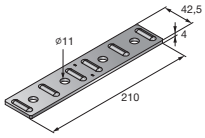  |

# MT Open C-channel (Strut) Connectors - Outdoor
Channel Ties

## MT-CT-T OC Channel Tie - Outdoor

| Order Designation | Technical Data | Sales pack quantity | Item number | |
|---|---|---|---|---|
| **MT-CT-T OC** | Outdoor, low to moderate pollution (C3 / C4 - low) | 12 pc | **2322411** | 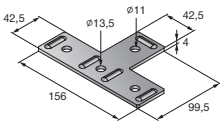 |

## MT-CT-H5 OC Channel Tie - Outdoor

| Order Designation | Technical Data | Sales pack quantity | Item number | |
|---|---|---|---|---|
| **MT-CT-H5 CO** | Outdoor, low to moderate pollution (C3 / C4 - low) | 8 pc | **2322410** | 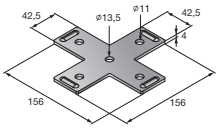 |

4

# MT Open C-channel (Strut) Connectors

Connectors - Outdoor

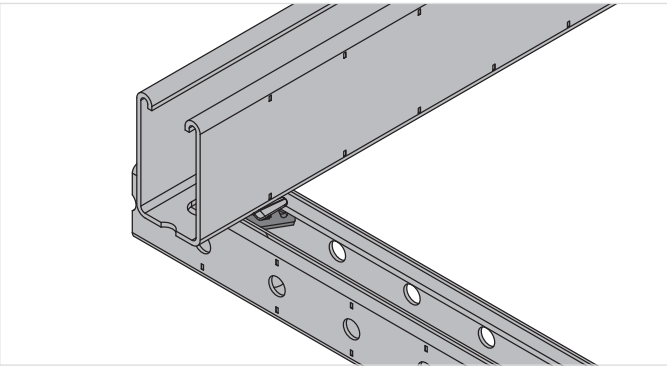

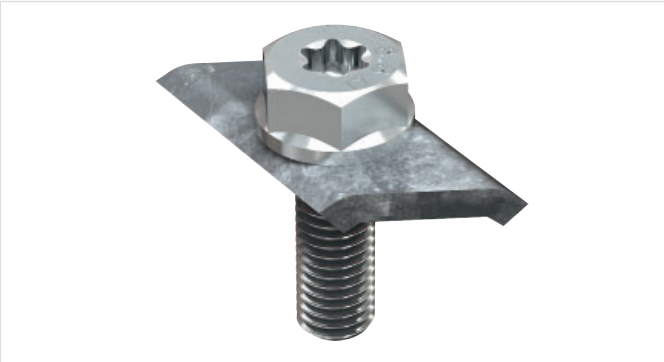

## Applications

- Connecting two MT strut channels together
- Suitable for use in moderately corrosive environments

## Advantages

- Adjustable – easily fit and repositioned along strut channels
- To be used with the MT-C-T A connector

## Technical data

| | |
|---|---|
| **Material composition** | Q235 or better steel |
| **Surface finish** | Outdoor Coated - HDG |

## MT-C-T A OC Connector - Outdoor

| Order Designation | Material composition | Technical data | Sales pack quantity | Item number | |
|---|---|---|---|---|---|
| **MT-C-T A OC** | Q355B – GB/T 700 | Outdoor, low to moderate pollution (C3 / C4 - low) | 20 pc | **2272057** | 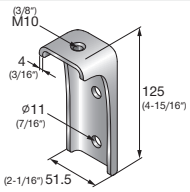  |

## MT-CTAB OC Connector Bolt - Outdoor

| Order Designation | Material composition | Technical data | Sales pack quantity | Item number | |
|---|---|---|---|---|---|
| **MT-CTAB OC** | Q235 or better steel | Outdoor, low to moderate pollution (C3 / C4 - low) | 100 pc | **2332788** | 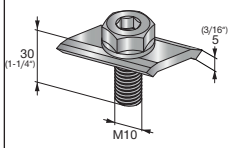  |

# MT Open C-channel (Strut) Connectors
Channel Ties

## **Technical data** MT Channel Ties

| Item image | Load drawing | Order Designation | + Fz | ± Fx | ± Fy |
|---|---|---|---|---|---|
|  | 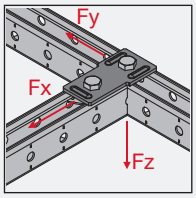  | **MT-CT-H2 / MT-CT-H2 OC** | 1,8 kN | 2,6 kN | 1,8 kN |
|  | 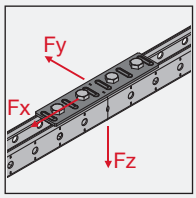  | **MT-CT-H4 / MT-CT-H4 OC** | 5,7 kN | 5,0 kN | 3,6 kN |
|  | 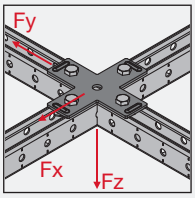  | **MT-CT-H5 / MT-CT-H5 OC** | 2,6 kN | 3,4 kN | 3,4 kN |
|  | 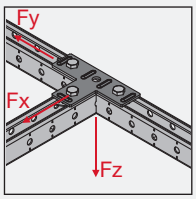  | **MT-CT-T / MT-CT-T OC** | 2,3 kN | 5,1 kN | 1,6 kN |

**Design note**
- Shown load values are recommended values with partial safety factors for actions and resistance included
- Design value = 1.4 * recommended value
- The design resistance of the products is defined in accordance with EN1993

## **Technical Data** MT Channel Connector

| Item image | Load drawing | Order Designation | + Fz | - Fz | ± Fx | ± Fy |
|---|---|---|---|---|---|---|
|  | 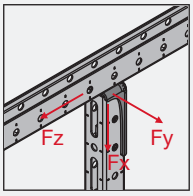  | **MT-C-T A / MT-C-T A OC** | 2,0 kN | 2,0 kN | 10,0 kN | 2,0 kN |

**Design note**
- Shown load values are recommended values with partial safety factors for actions and resistance included
- Design value = 1.4 * recommended value
- The design resistance of the products is defined in accordance with EN1993

4

# MT Open C-channel (Strut) Connectors
Channel Ties

## Operation Instruction
MT-CT-H2

2325257-04.2021

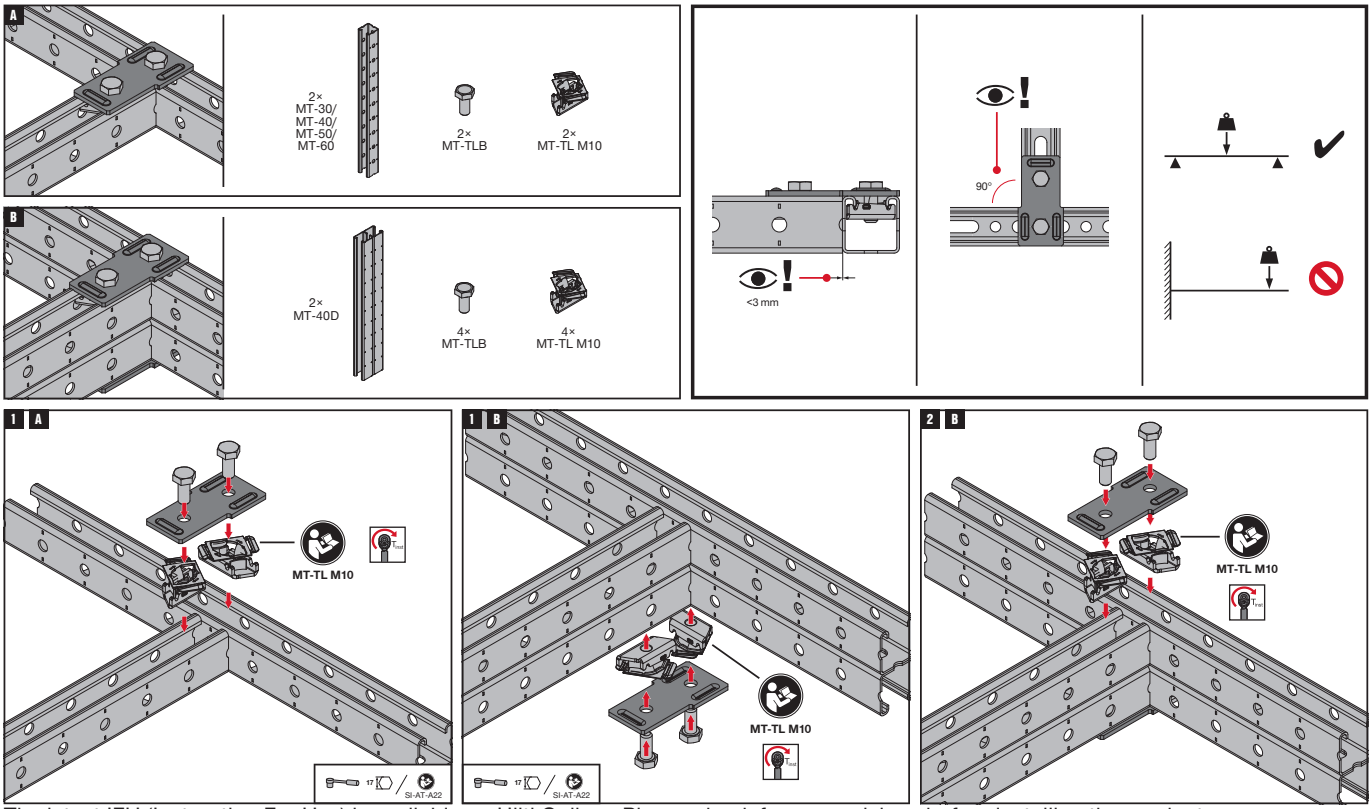


The latest IFU (Instruction For Use) is available on Hilti Online. Please check for any revisions before installing the product.

MT-CT-H4

2327511-04.2021

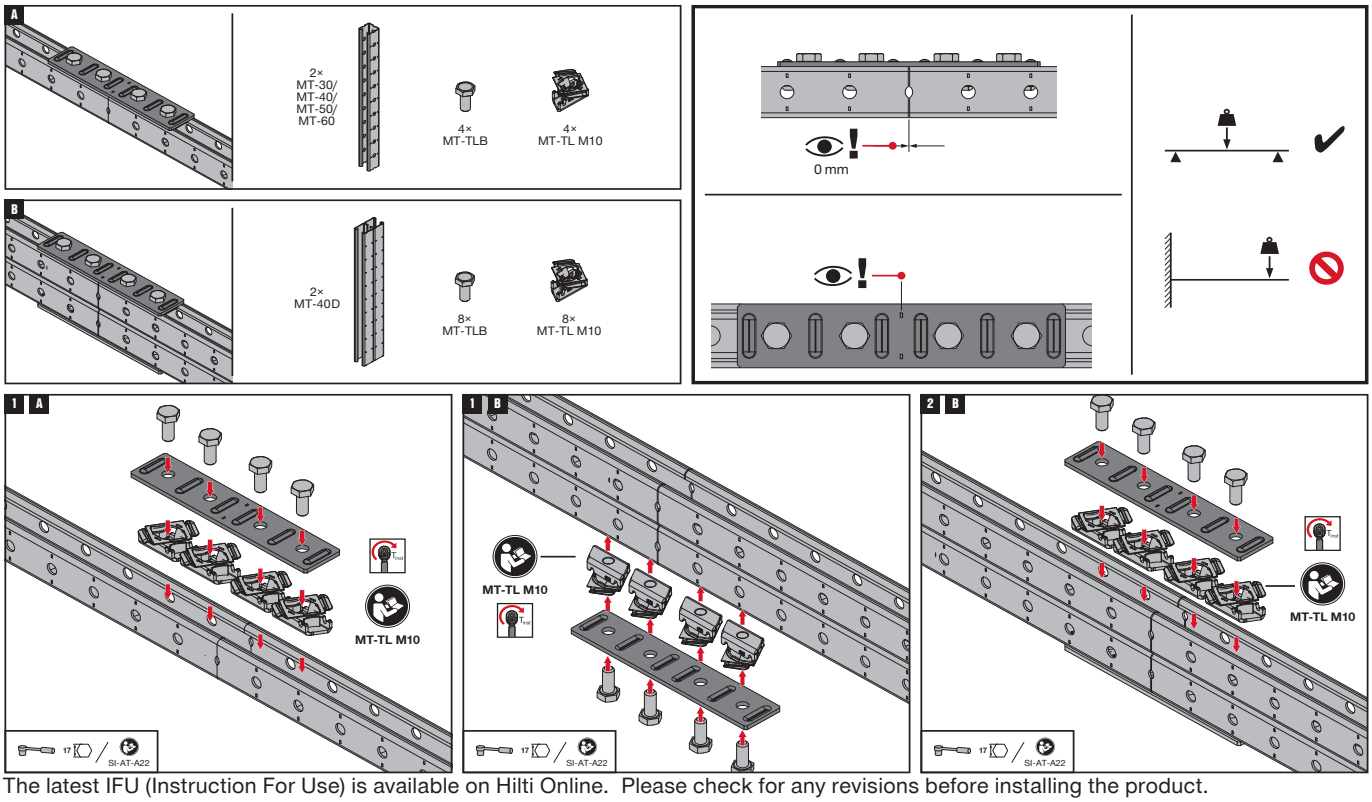


The latest IFU (Instruction For Use) is available on Hilti Online. Please check for any revisions before installing the product.

# MT Open C-channel (Strut) Connectors
Channel Ties

## Operation Instruction
MT-CT-H5

2325301-04.2021

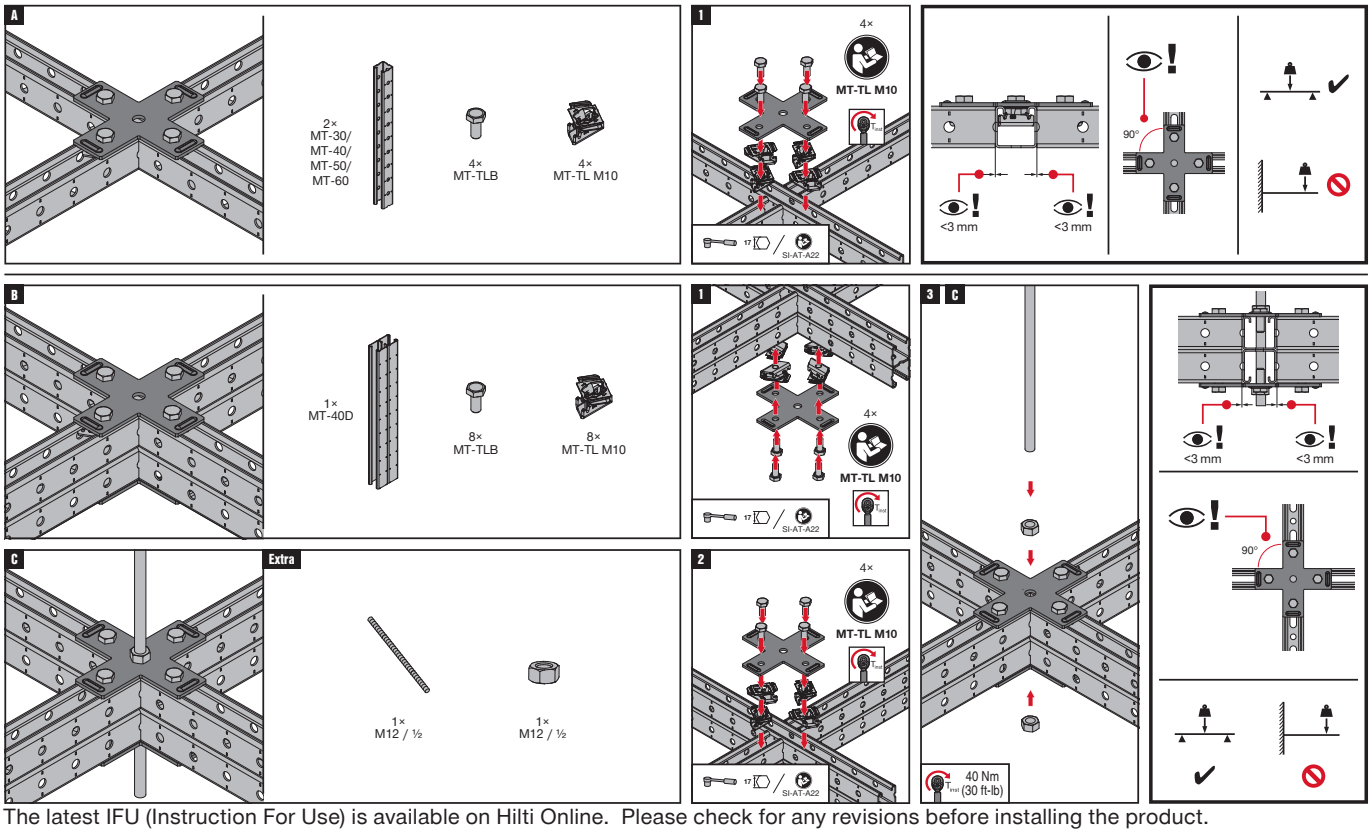


The latest IFU (Instruction For Use) is available on Hilti Online. Please check for any revisions before installing the product.

## Operation Instruction
MT-CT-T

2325310-04.2021

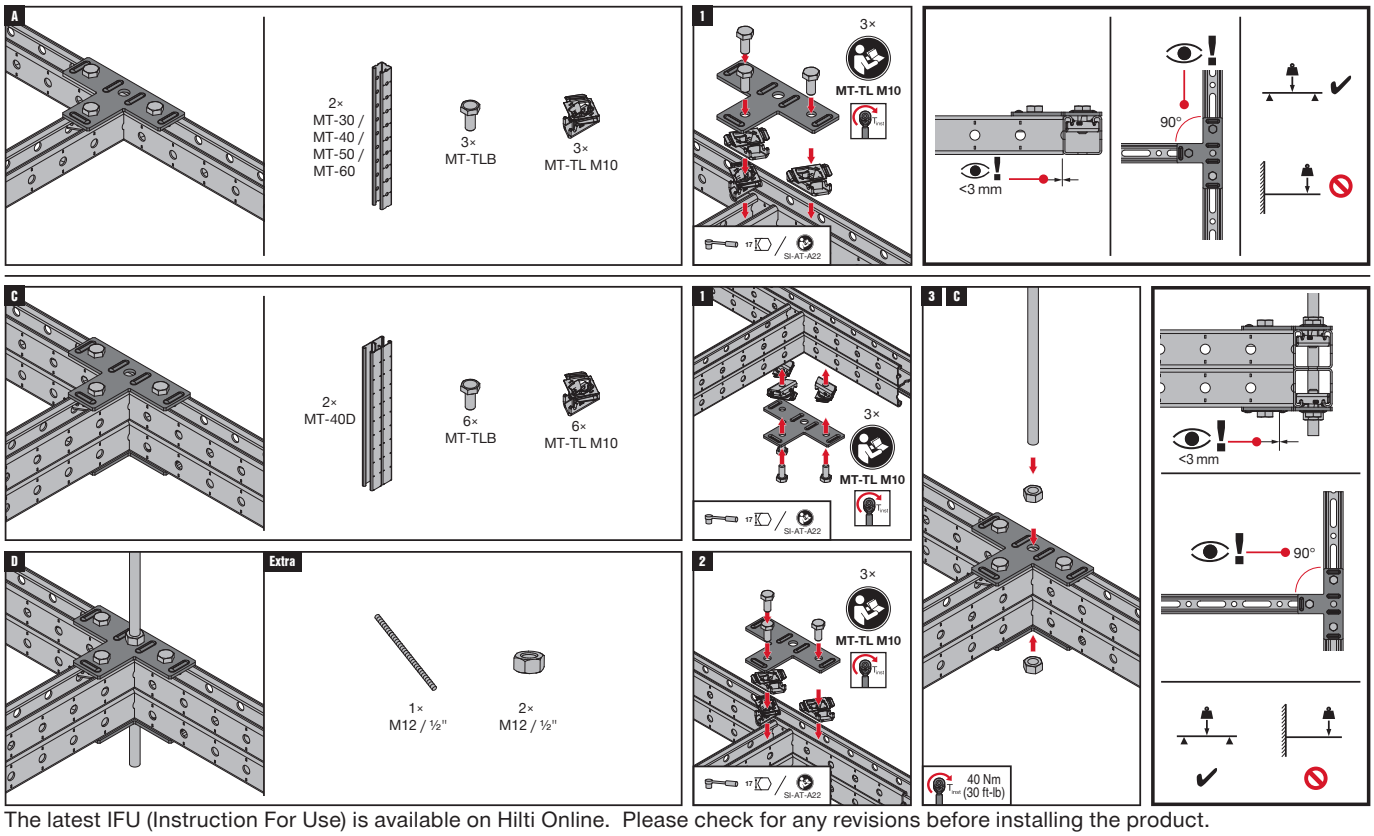


The latest IFU (Instruction For Use) is available on Hilti Online. Please check for any revisions before installing the product.

# MT Open C-channel (Strut) Connectors

4

## Operation Instruction

MT-C-T A / MT-C-T A OC

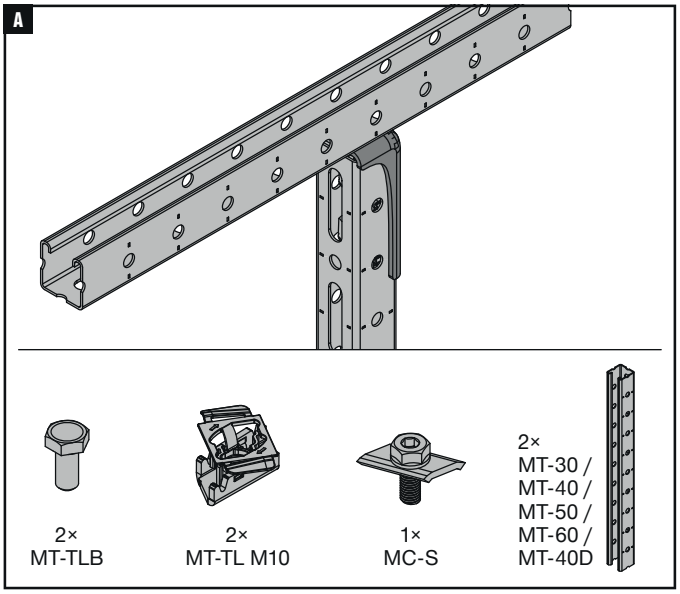


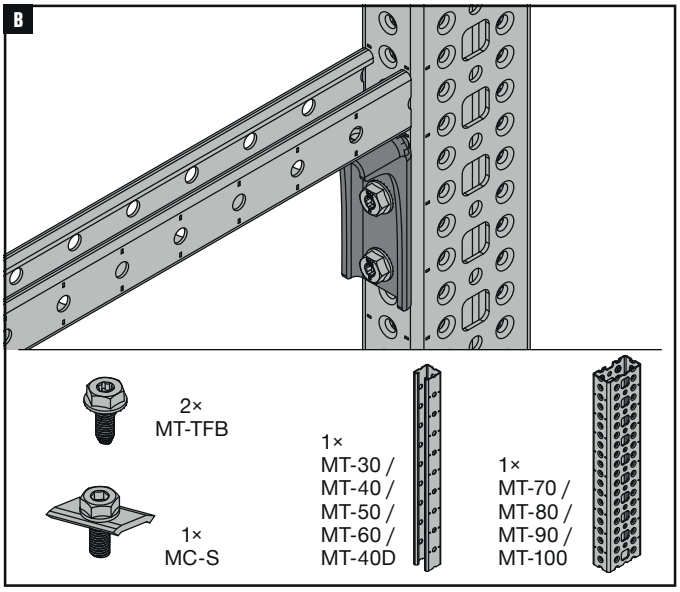


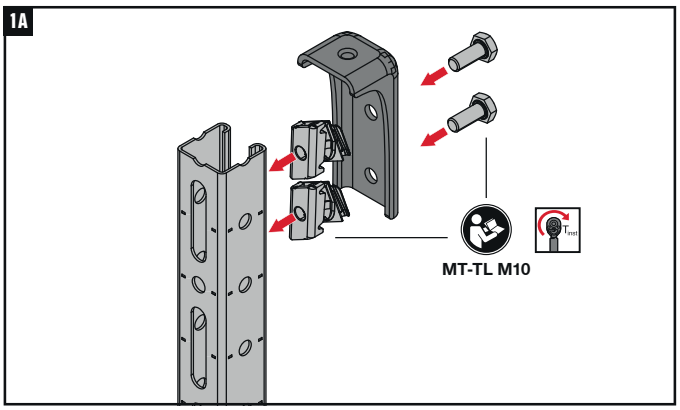


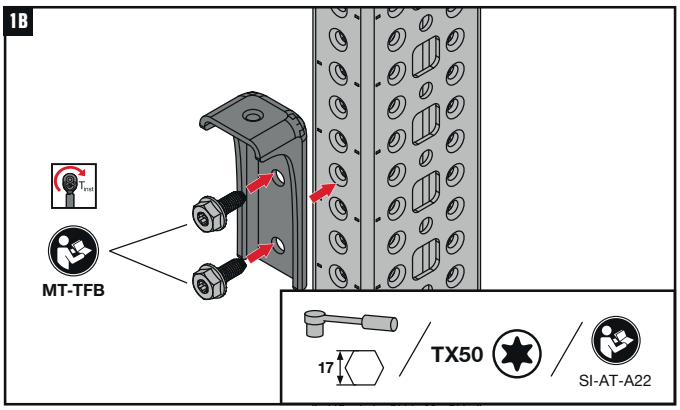


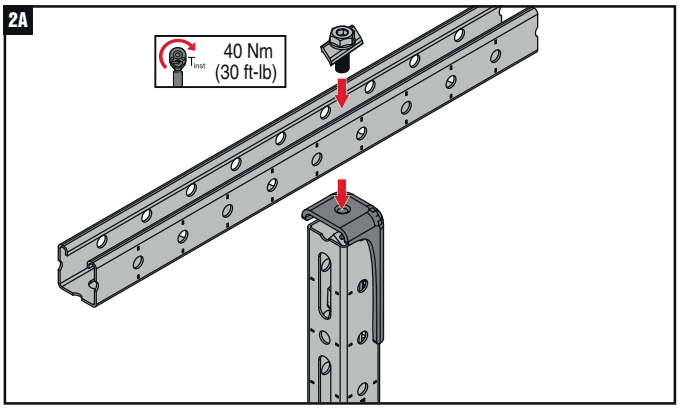


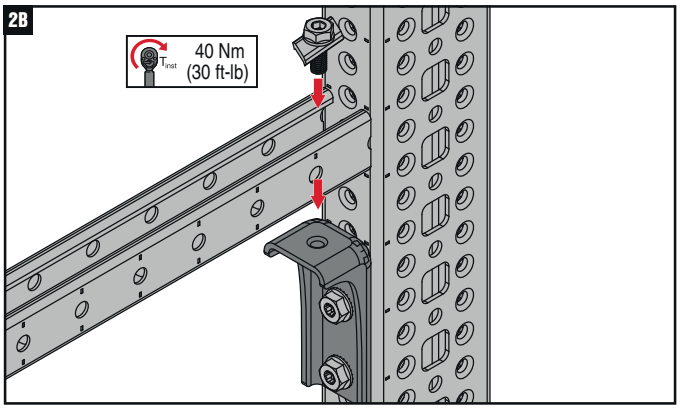


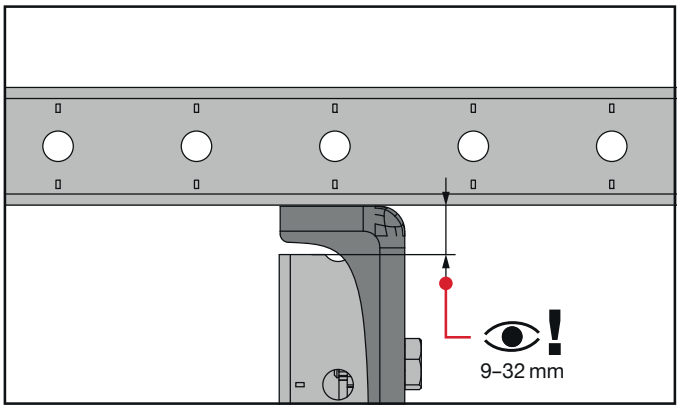


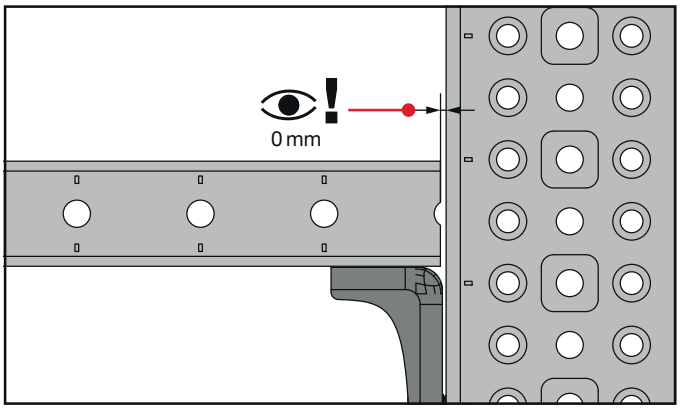


The latest IFU (Instruction For Use) is available on Hilti Online. Please check for any revisions before installing the product.

# MT Open C-channel (Strut) Connectors



## Operation Instruction
MT-CTAB / MT-CTAB OC

2334482-07.2021

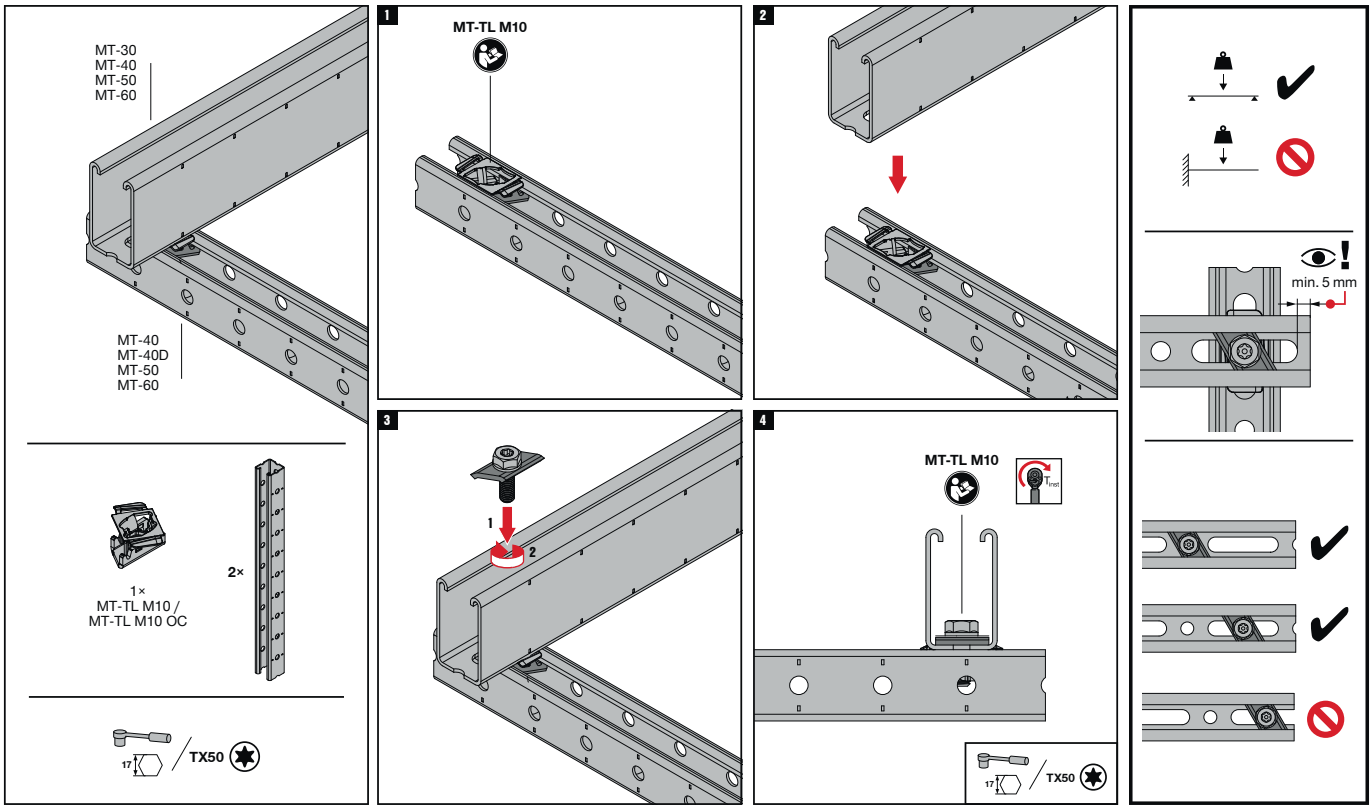


The latest IFU (Instruction For Use) is available on Hilti Online. Please check for any revisions before installing the product.

4

# MT Open C-channel (Strut) Connectors
## Splice Connectors

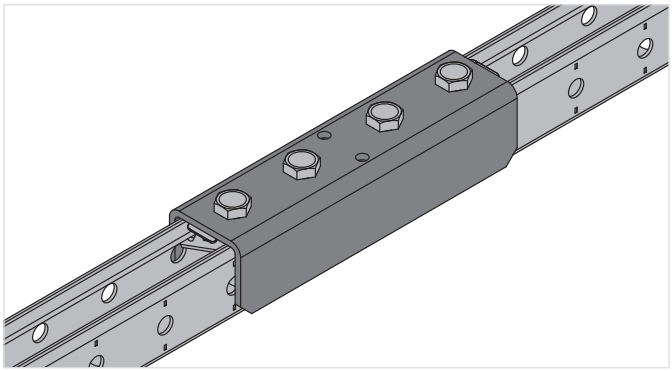

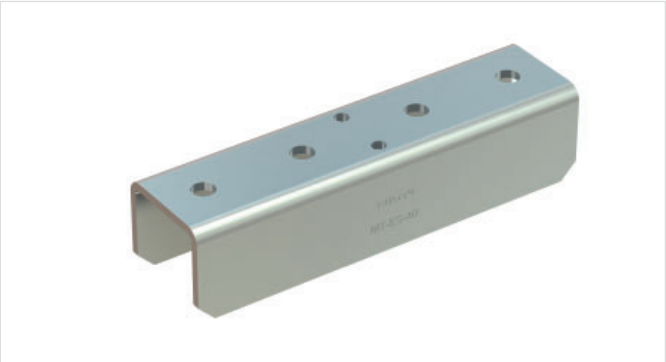

## Applications

- Extending MT strut channels by fastening them together end-to-end
- Assembling metal framing for MEP support structures when longer spans or increased floor/ceiling clearance are required
- Suitable for use in dry, indoor environments

## Advantages

- Part of the Hilti MT system – an economical, all-in-one solution for virtually all modular MEP support structures
- Easy to install – compatible with the Hilti MT Twist-Lock, a faster alternative to spring nuts for assembling a modular support system
- Adaptable – unlike welding, angle brackets allow you to modify strut channel framing during installation and for future MEP requirements

## Technical data

| | |
|---|---|
| **Material composition** | Q235 or better steel |
| **Surface finish** | Pre-galvanized - for dry indoor use only |

### MT-ES-40 Splice Connector

| Order Designation | Technical data | Sales pack Quantity | Item number | |
|---|---|---|---|---|
| **MT-ES-40** | Dry indoor conditions (C1) Indoor with temporary condensation (C2) | 12 pc | **2272062** | 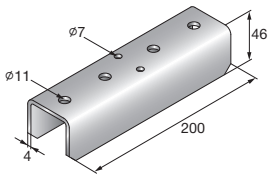  |

### MT-ES-60 Splice Connector

| Order Designation | Technical data | Sales pack Quantity | Item number | |
|---|---|---|---|---|
| **MT-ES-60** | Dry indoor conditions (C1) Indoor with temporary condensation (C2) | 8 pc | **2322415** | 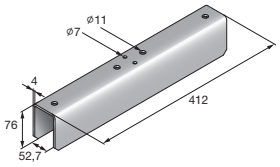  |

# MT Open C-channel (Strut) Connectors
Splice Connectors - Outdoor

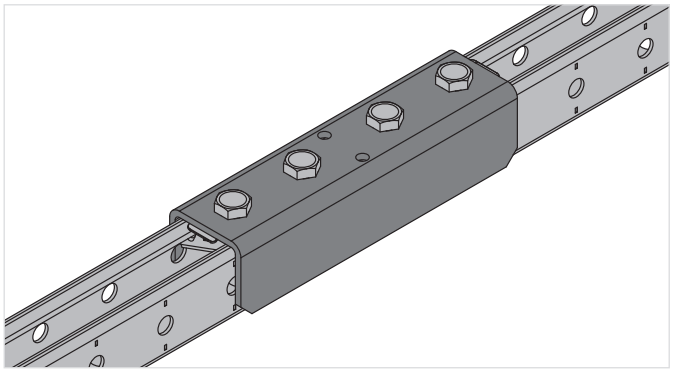

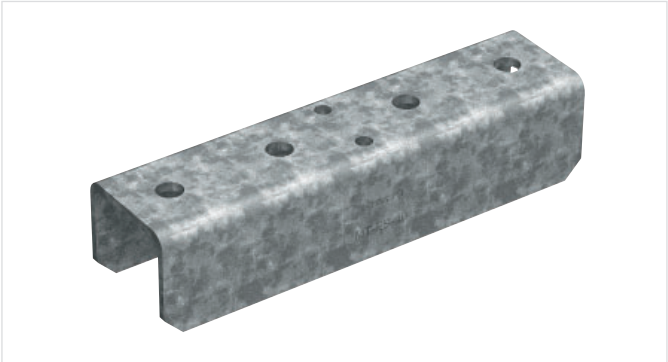

## Applications

- Extending MT strut channels by fastening them together end-to-end
- Assembling metal framing for MEP support structures when longer spans or increased floor/ceiling clearance are required
- Suitable for use in moderately corrosive environments

## Advantages

- Part of the Hilti MT system – an economical, all-in-one solution for virtually all modular MEP support structures
- Easy to install – compatible with the Hilti MT Twist-Lock, a faster alternative to spring nuts for assembling a modular support system
- Adaptable – unlike welding, angle brackets allow you to modify strut channel framing during installation and for future MEP requirements

## Technical data

| | |
|---|---|
| **Material composition** | Q235 or better steel |
| **Surface finish** | Hot-dip galvanized - for outdoor use |

## MT-ES-40 OC Splice Connector - Outdoor

| Order Designation | Technical data | Sales pack Quantity | Item number | |
|---|---|---|---|---|
| **MT-ES-40 OC** | Outdoor, low to moderate pollution (C3 / C4 - low) | 12 pc | **2272063** | 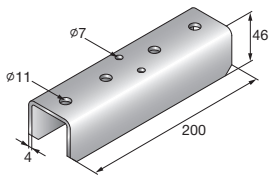  |

## MT-ES-60 OC Splice Connector - Outdoor

| Order Designation | Technical data | Sales pack Quantity | Item number | |
|---|---|---|---|---|
| **MT-ES-60 OC** | Outdoor, low to moderate pollution (C3 / C4 - low) | 8 pc | **2322416** | 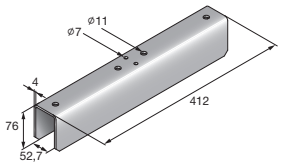  |

# MT Open C-channel (Strut) Connectors
Splice Connectors



## **Technical data** MT Splice Connector

| Item image | Load drawing | Order Designation | + Fz | - Fz | ± Fx | ± Fy | ± My |
|---|---|---|---|---|---|---|---|
|  | 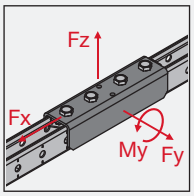  | **MT-ES-40 / MT-ES-40 OC** | 10,0 kN | 10,0 kN | 10,0 kN | 0,6 kN | 0,3 kNm |
|  | 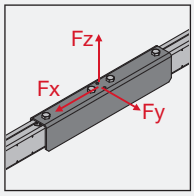  | **MT-ES-60 / MT-ES-60 OC** | 4,3 kN | 3,9 kN | 10,0 kN | 1,1 kN | |

**Design note**
- Shown load values are recommended values with partial safety factors for actions and resistance included
- Design value = 1.4 * recommended value
- The design resistance of the products is defined in accordance with EN1993

# MT Open C-channel (Strut) Connectors
Splice Connectors

## Operation Instruction
MT-ES-40 / MT-ES-40 OC

2288189-06.2020

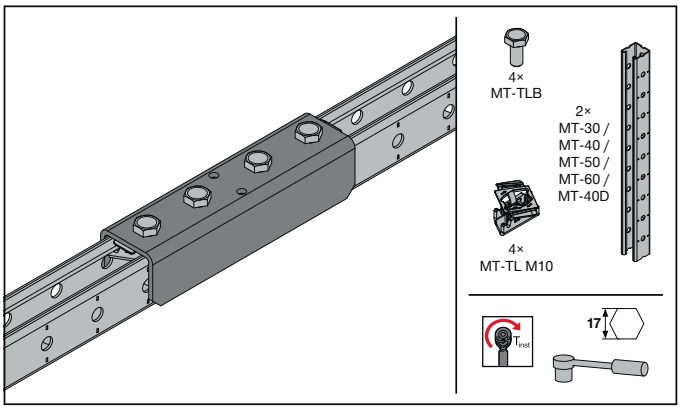


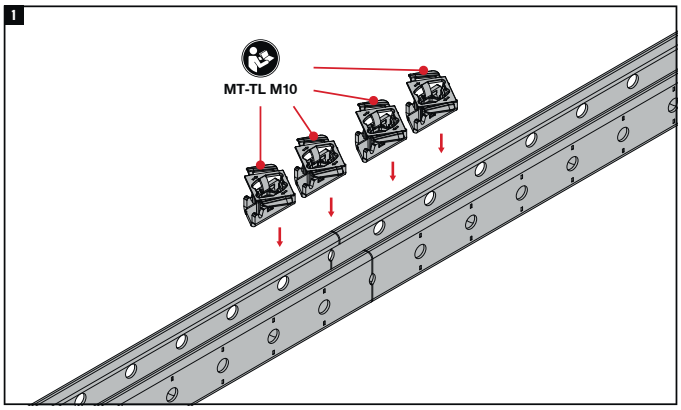


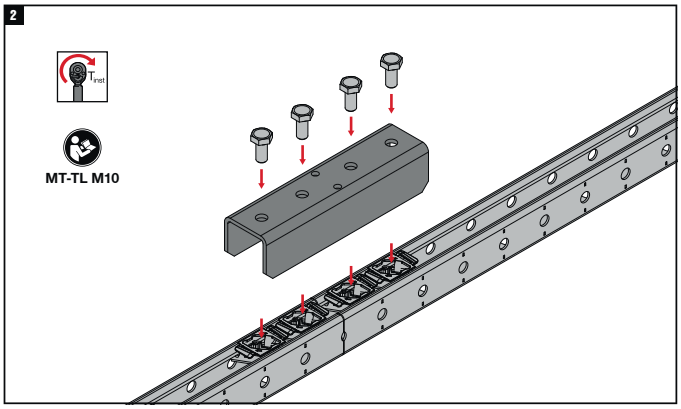


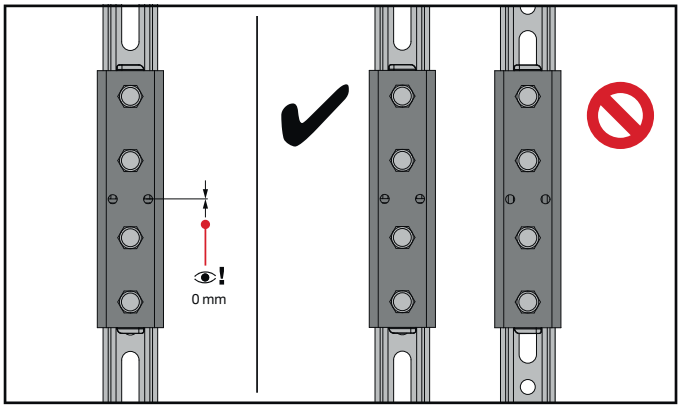


The latest IFU (Instruction For Use) is available on Hilti Online. Please check for any revisions before installing the product.

MT-ES-60

2325098-04.2021

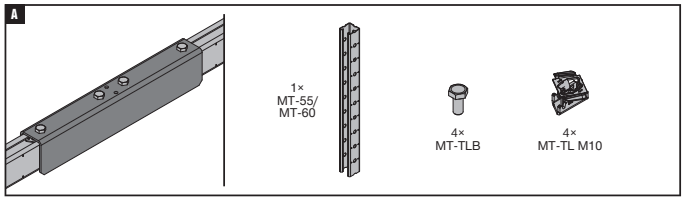


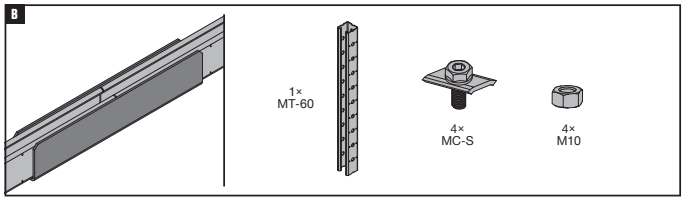


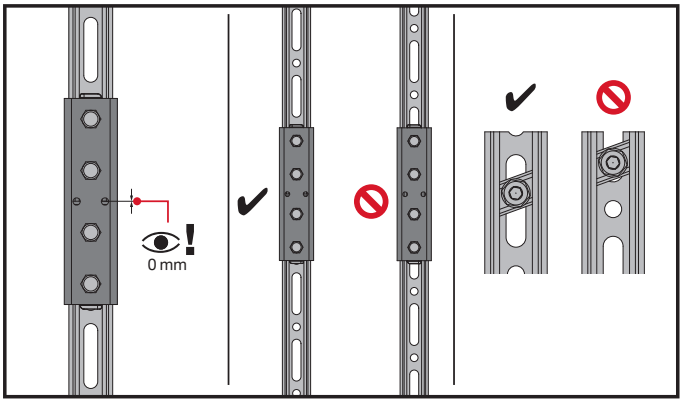


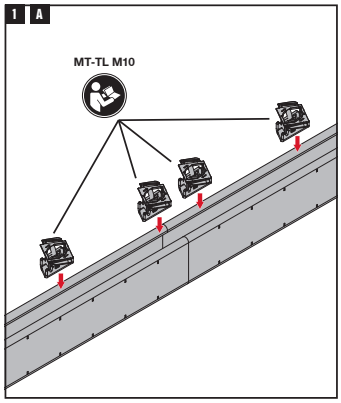


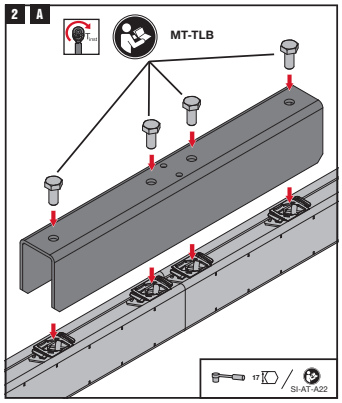


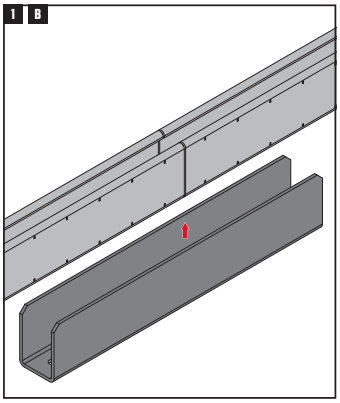


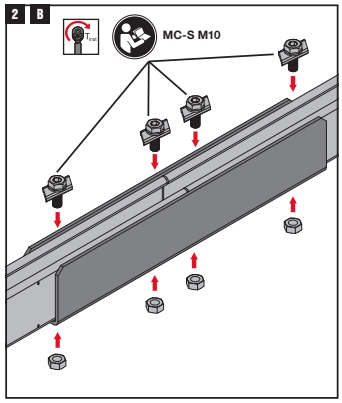


The latest IFU (Instruction For Use) is available on Hilti Online. Please check for any revisions before installing the product.

# MT Open C-channel (Strut) Connectors
Long Span Bracing

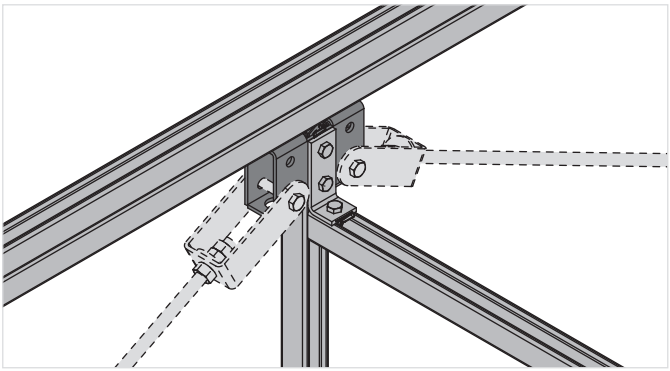

## Applications

- Assembling and bracing modular support structures with longer spans

## Advantages

- High load capacity – designed for threaded rod bracing for increased rigidity over long spans
- Part of the Hilti MT system – an economical, all-in-one solution for virtually all modular MEP support structures

## Technical data

| | |
|---|---|
| **Material composition** | Q235 or better steel |
| **Surface finish** | Indoor Coated - Electro galvanized |

## MT-C-LS Connector

| Order Designation | Technical data | Sales pack Quantity | Item number | |
|---|---|---|---|---|
| **MT-C-LS** | Dry indoor conditions (C1) Indoor with temporary condensation (C2) | 10 pc | **2322419** | 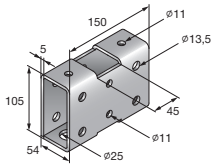  |

# MT Open C-channel (Strut) Connectors
Long Span Bracing

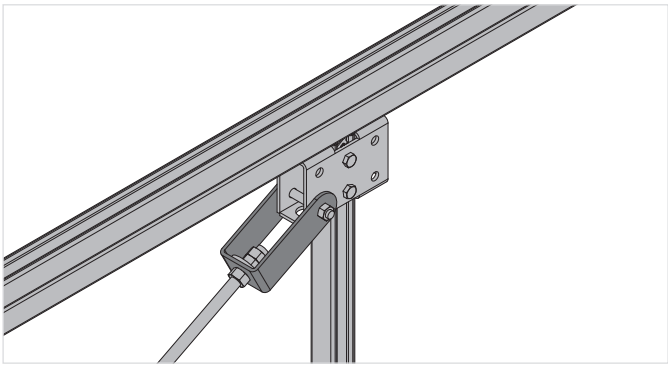

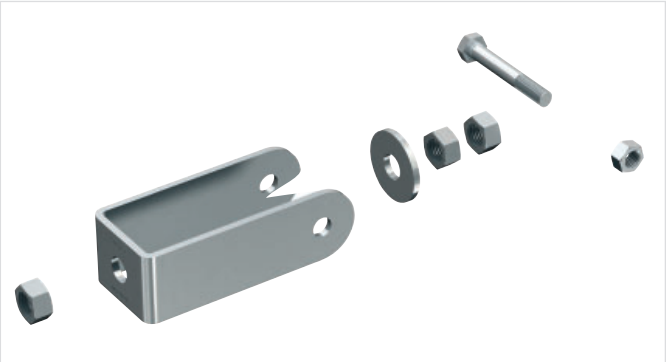

## Applications

- Bracing modular support structures with longer spans

## Advantages

- High load capacity – designed for threaded rod bracing for increased rigidity over long spans
- Part of the Hilti MT system – an economical, all-in-one solution for virtually all modular MEP support structures

## Technical data

| | |
|---|---|
| **Material composition** | Q235 or better steel |
| **Surface finish** | Indoor Coated - Electro galvanized |

## MT-FTR-LS Brace Connector

| Order Designation | Technical data | Sales pack Quantity | Item number | |
|---|---|---|---|---|
| **MT-FTR-LS** | Dry indoor conditions (C1) Indoor with temporary condensation (C2) | 1 pc | **2322421** | 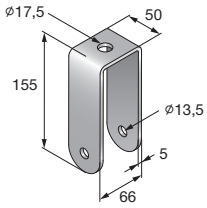  |

# MT Open C-channel (Strut) Connectors
Long Span Bracing

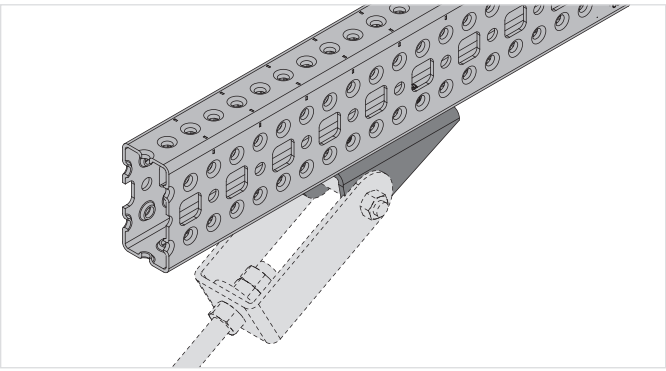

## Applications

- Assembling and bracing modular support structures with longer spans

## Advantages

- High load capacity – designed for threaded rod bracing for increased rigidity over long spans
- Part of the Hilti MT system – an economical, all-in-one solution for virtually all modular MEP support structures

## Technical data

| | |
|---|---|
| **Material composition** | Q235 or better steel |
| **Surface finish** | Indoor Coated - Electro galvanized |

## MT-AB-LS Brace Connector

| Order Designation | Profile | Technical data | Sales pack Quantity | Item number | |
|---|---|---|---|---|---|
| **MT-AB-LS** | MT-40D OC<br>MT-70<br>MT-80 | Dry indoor conditions (C1) Indoor with temporary condensa-tion (C2) | 24 pc | **2322420** | 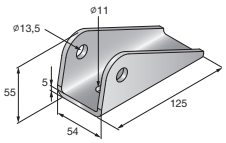 |

# MT Open C-channel (Strut) Connectors
Long Span Bracing - Outdoor

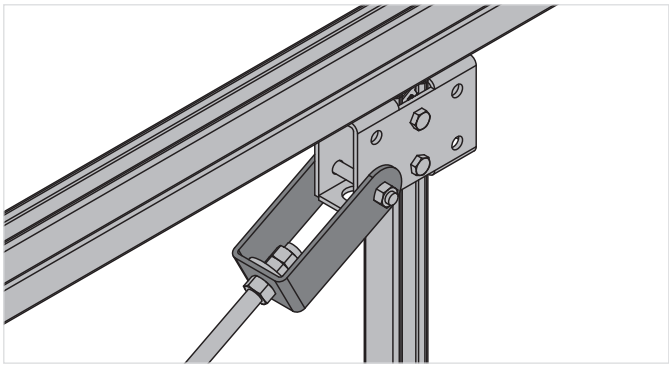

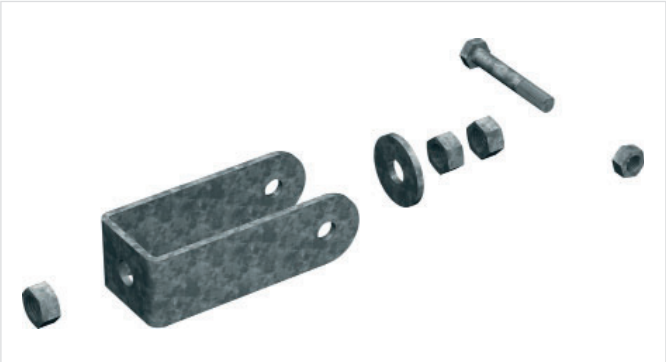

## Applications

- Bracing modular support structures with longer spans

## Advantages

- High load capacity – designed for threaded rod bracing for increased rigidity over long spans
- Part of the Hilti MT system – an economical, all-in-one solution for virtually all modular MEP support structures
- Corrosion resistance – hot-dip galvanized to help protect against moisture and chemical corrosion

## Technical data

| | |
|---|---|
| **Material composition** | Q235 or better steel |
| **Surface finish** | Outdoor Coated - HDG |

## MT-FTR-LS OC Brace Connector - Outdoor

| Order Designation | Technical data | Sales pack Quantity | Item number | |
|---|---|---|---|---|
| **MT-FTR-LS OC** | Outdoor, low to moderate pollution (C3 / C4 - low) | 1 pc | **2322424** | 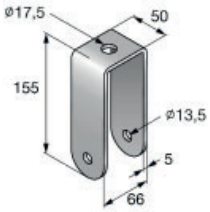  |

4

# MT Open C-channel (Strut) Connectors
## Long Span Bracing - Outdoor

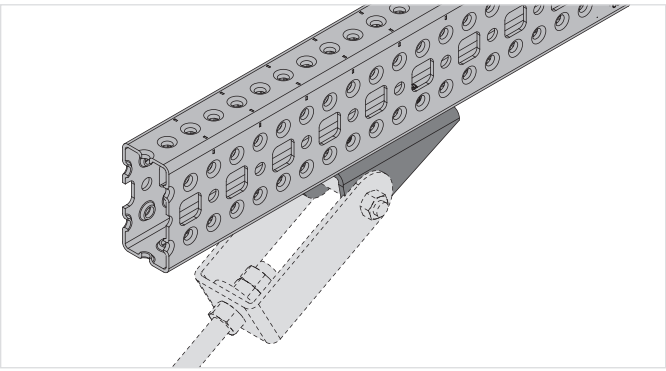

## Applications

- Assembling and bracing modular support structures with longer spans

## Advantages

- High load capacity – enables threaded rod bracing for increased rigidity over long spans
- Corrosion resistance – hot-dip galvanized to help protect against moisture and chemical corrosion
- Part of the Hilti MT system – an economical, all-in-one solution for virtually all modular MEP support structures

## Technical data

| | |
|---|---|
| **Material composition** | Q235 or better steel |
| **Surface finish** | Outdoor Coated - HDG |

## MT-AB-LS OC Brace Connector - Outdoor

| Order Designation | Technical data | Sales pack Quantity | Item number | |
|---|---|---|---|---|
| **MT-AB-LS OC** | Outdoor, low to moderate pollution (C3 / C4 - low) | 24 pc | **2322423** | 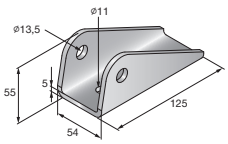  |

# MT Open C-channel (Strut) Connectors
Long Span Bracing

## **Technical data** Long span bracing

| Item image | Load drawing | Order Designation | + Fz | - Fz | ± Fx | ± Fy |
|---|---|---|---|---|---|---|
|  | 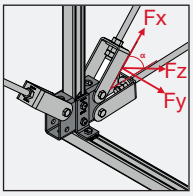  | **MT-C-LS + MT-FTR-LS** | - | - | 10,0 kN | - |

**Design note**
- Shown load values are recommended values with partial safety factors for actions and resistance included
- Design value = 1.4 * recommended value
- The design resistance of the products is defined in accordance with EN1993

4

# MT Open C-channel (Strut) Connectors

Long Span Bracing

## Operation Instruction

MT-C-LS / MT-C-LS OC

2325258-04.2021

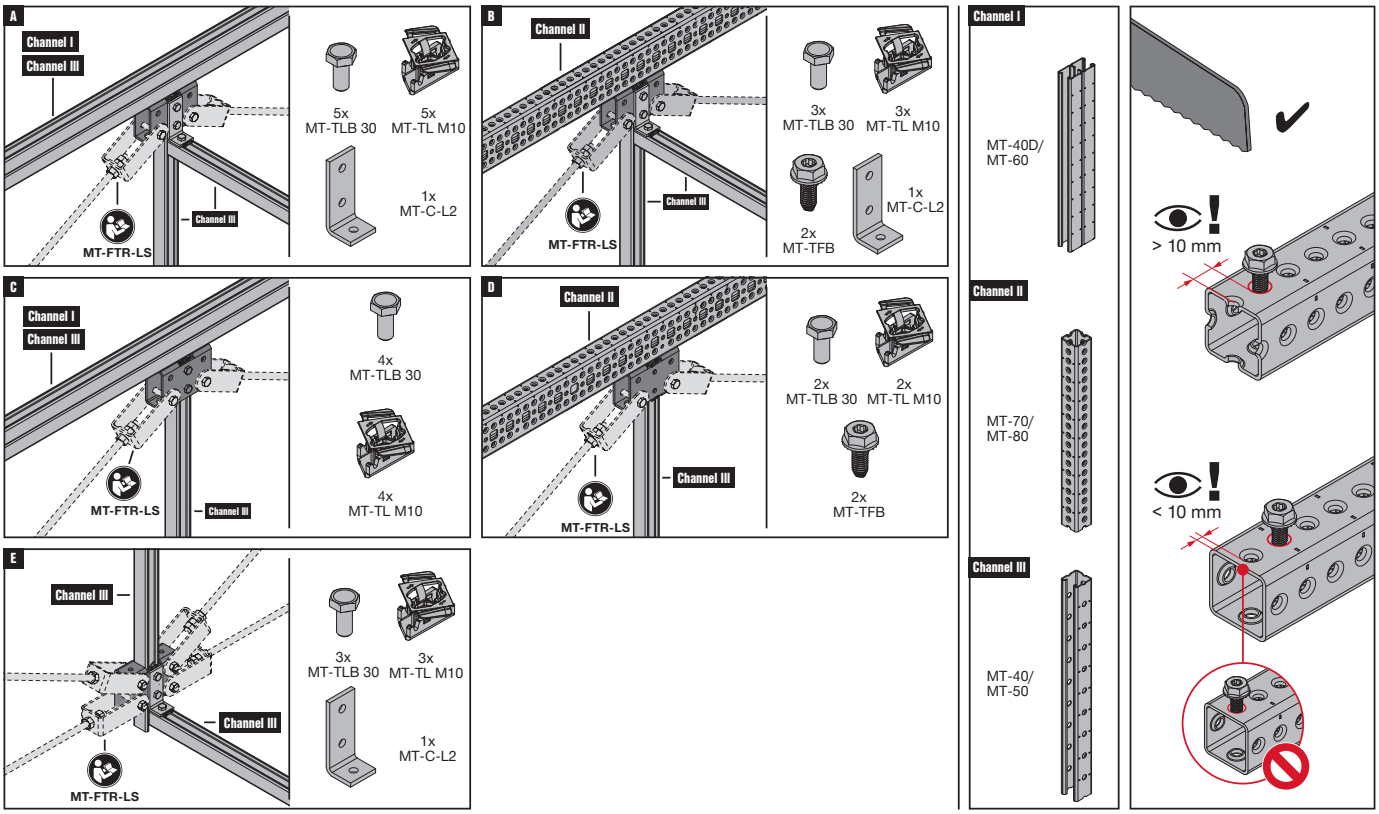


The latest IFU (Instruction For Use) is available on Hilti Online. Please check for any revisions before installing the product.

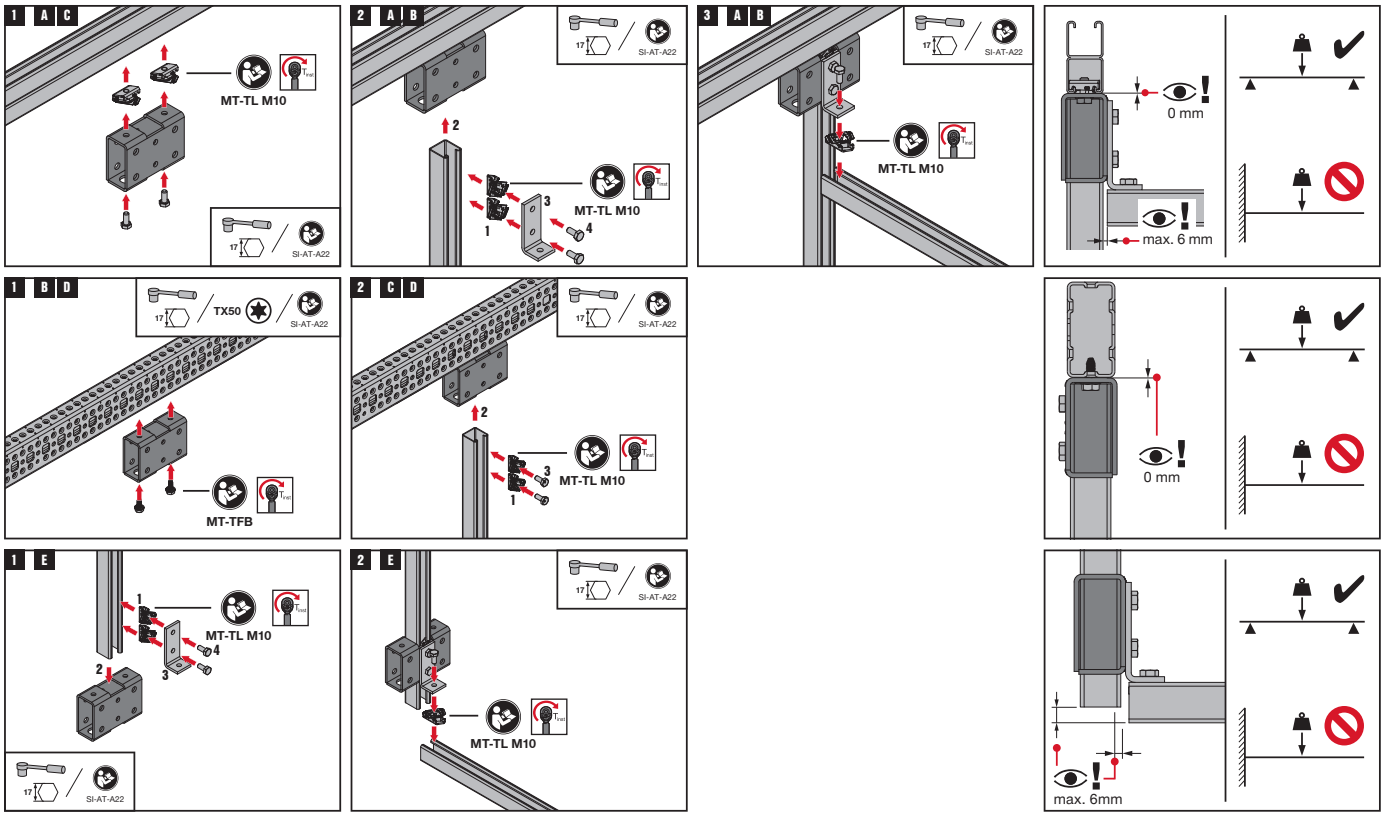


The latest IFU (Instruction For Use) is available on Hilti Online. Please check for any revisions before installing the product.

# MT Open C-channel (Strut) Connectors
Long Span Bracing

## Operation Instruction
MT-FTR-LS / MT-FTR-LS OC

2325259-04.2021

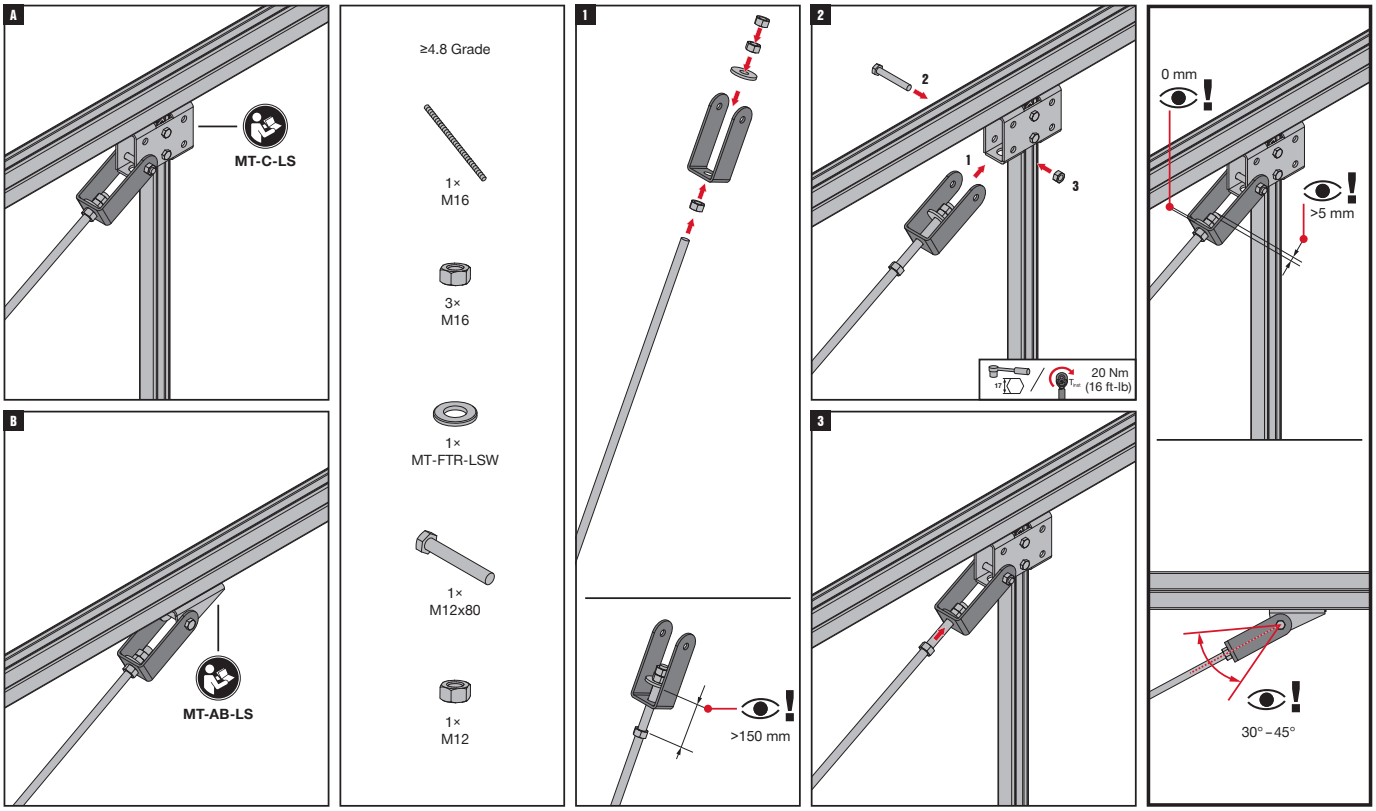


The latest IFU (Instruction For Use) is available on Hilti Online. Please check for any revisions before installing the product.

MT-AB-LS / MT-AB-LS OC

2325231-04.2021

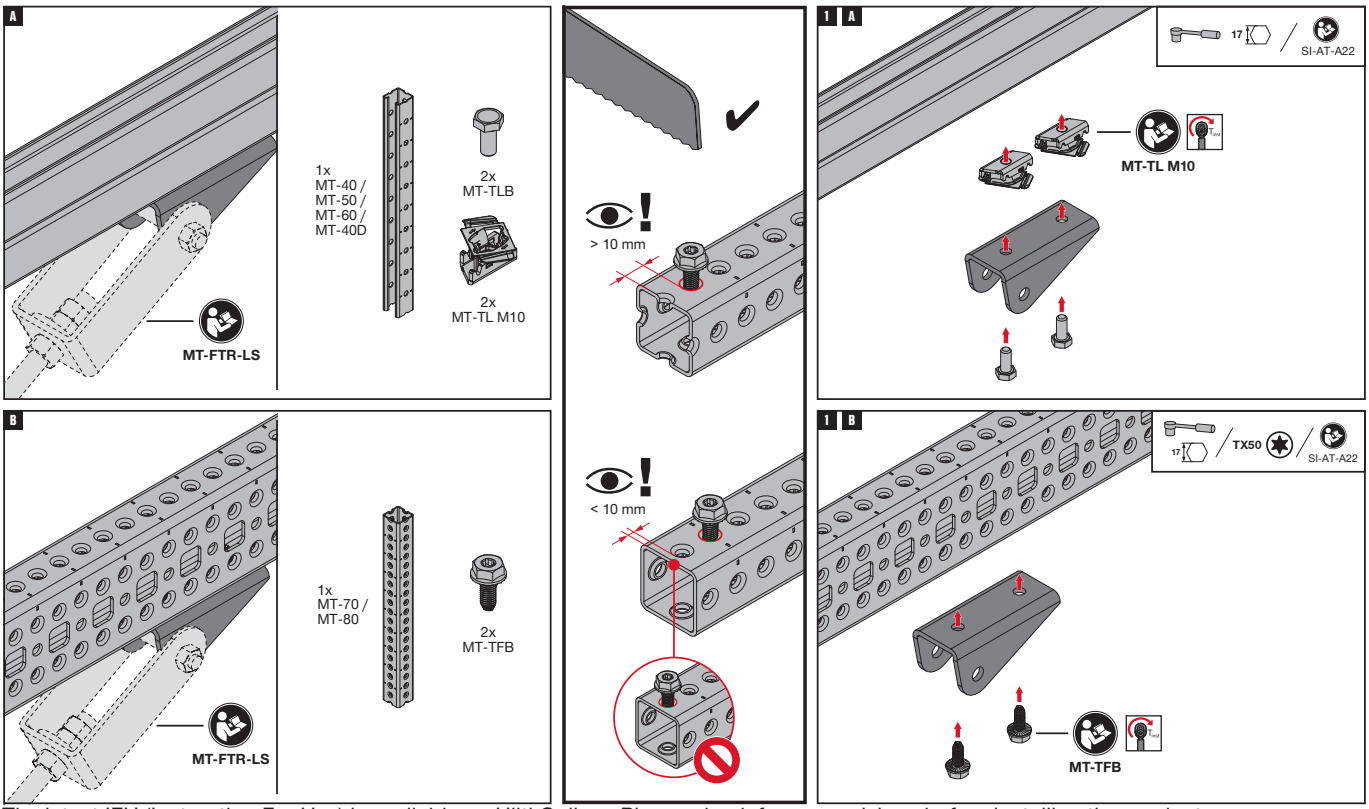


The latest IFU (Instruction For Use) is available on Hilti Online. Please check for any revisions before installing the product.

4

# MT Open C-channel (Strut) Connectors
## Channel Clamps

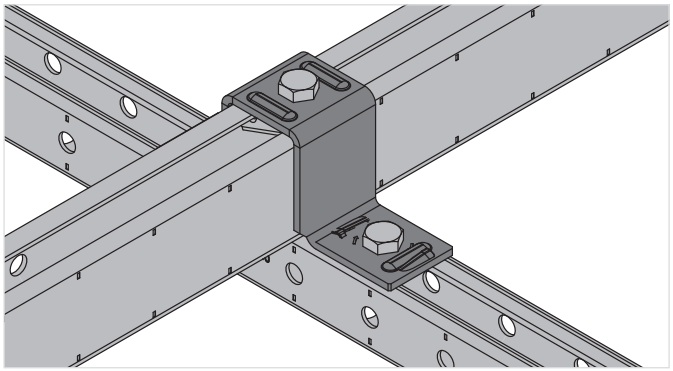

## Applications

- Cross-connection of one strut channel to another channel or girder
- Suitable for use in dry, indoor environments

## Advantages

- Compatible with MT Twist-Lock and MT Thread Forming Bolt channel connectors – for much faster, adaptable assembly
- Universal – complete many different applications using few parts

## Technical data

| | |
|---|---|
| **Material composition** | Q235 or better steel |
| **Surface finish** | Indoor Coated - Electro galvanized |

### MT-CC-30 Channel Clamp

| Order Designation | Technical data | Sales pack Quantity | Item number | |
|---|---|---|---|---|
| **MT-CC-30** | Dry indoor conditions (C1) Indoor with temporary condensation (C2) | 10 pc | **2322427** | 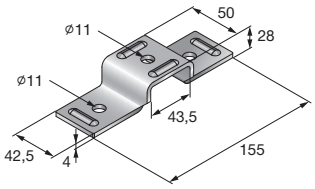  |

### MT-CC-40/50 Channel Clamp

| Order Designation | Technical data | Sales pack Quantity | Item number | |
|---|---|---|---|---|
| **MT-CC-40/50** | Dry indoor conditions (C1) Indoor with temporary condensation (C2) | 20 pc | **2322429** | 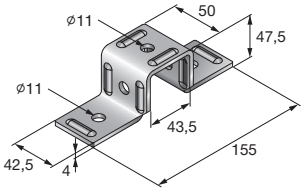  |

# MT Open C-channel (Strut) Connectors
Channel Clamps

## MT-CC-40/50X2 Channel Clamp

| Order Designation | Technical data | Sales pack Quantity | Item number | |
|---|---|---|---|---|
| **MT-CC-40/50X2** | Dry indoor conditions (C1) Indoor with temporary condensation (C2) | 10 pc | **2322392** | 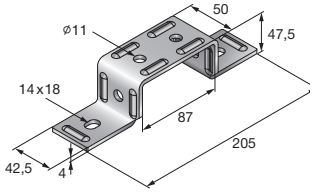 |

## MT-CC-60 Channel Clamp

| Order Designation | Technical data | Sales pack Quantity | Item number | |
|---|---|---|---|---|
| **MT-CC-60** | Dry indoor conditions (C1) Indoor with temporary condensation (C2) | 15 pc | **2322396** | 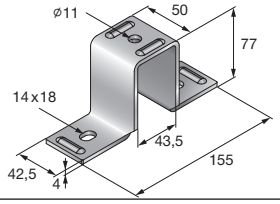 |

## MT-CC-40D Channel clamp

| Order Designation | Technical data | Sales pack Quantity | Item number | |
|---|---|---|---|---|
| **MT-CC-40D** | Dry indoor conditions (C1) Indoor with temporary condensation (C2) | 10 pc | **2322398** | 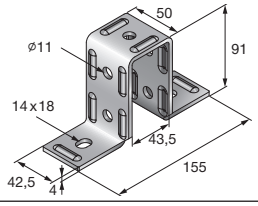 |

4

# MT Open C-channel (Strut) Connectors
## Channel Clamps - Outdoor

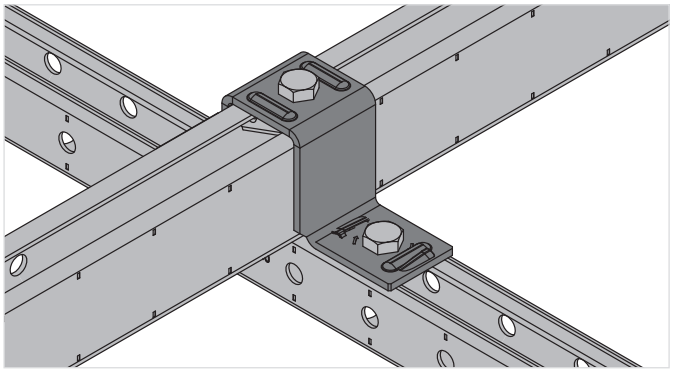

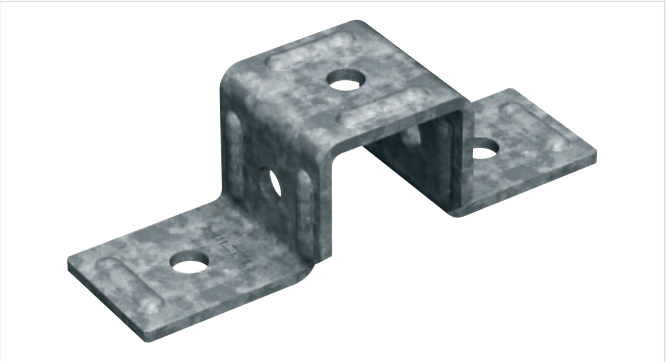

## Applications

- Attaching polypanels to a substructure of MT strut/girders
- Hot/cold aisle containment in data centers

## Advantages

- Helps lower installation cost – this new solution uses fewer and simpler components than previous Hilti panel connectors, saving you upfront costs and time on-site
- Compatible with MT Thread Forming Bolt channel connectors – for much faster, adaptable assembly with higher pull-out and shear resistance
- Corrosion resistance – hot-dip galvanized to help protect against moisture and chemical corrosion

## Technical data

| | |
|---|---|
| **Material composition** | Q235 or better steel |
| **Surface finish** | Outdoor Coated - HDG |

### MT-CC-40/50 OC Channel Clamp - Outdoor

| Order Designation | Technical data | Sales pack Quantity | Item number | |
|---|---|---|---|---|
| **MT-CC-40/50 OC** | Outdoor, low to moderate pollution (C3 / C4 - low) | 20 pc | **2322391** | 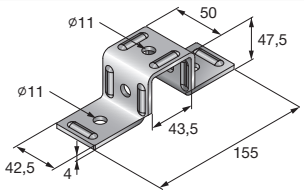  |

### MT-CC-40/50X2 OC Channel Clamp - Outdoor

| Order Designation | Technical data | Sales pack Quantity | Item number | |
|---|---|---|---|---|
| **MT-CC-40/50X2 OC** | Outdoor, low to moderate pollution (C3 / C4 - low) | 10 pc | **2322393** | 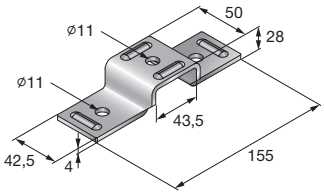  |

# MT Open C-channel (Strut) Connectors
Channel Clamps - Outdoor

## MT-CC-60 OC Channel Clamp - Outdoor

| Order Designation | Technical data | Sales pack Quantity | Item number | |
|---|---|---|---|---|
| **MT-CC-60 OC** | Outdoor, low to moderate pollution (C3) | 15 pc | **2322431** | 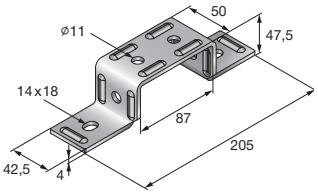  |

## MT-CC-40D OC Channel Clamp - Outdoor

| Order Designation | Technical data | Sales pack Quantity | Item number | |
|---|---|---|---|---|
| **MT-CC-40D OC** | Outdoor, low to moderate pollution (C3) | 10 pc | **2322399** | 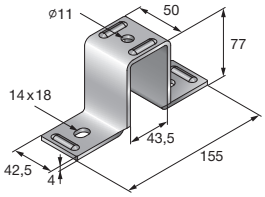  |

4

# MT Open C-channel (Strut) Connectors
## Channel Clamps

### **Technical data** MT-Channel Clamps

| Item image | Load drawing | Order Designation | + Fz | - Fz | ± Fx | ± Fy |
|---|---|---|---|---|---|---|
|  | 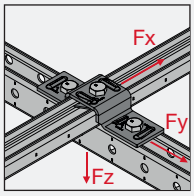  | **MT-CC-30** | - | 5,4 kN | 2,5 kN | 5,7 kN |
|  | 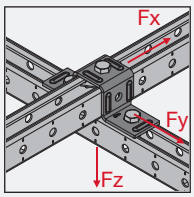  | **MT-CC-40/50 / MT-CC-40/50 OC** | - | 5,4 kN | 2,5 kN | 5,7 kN |
|  | 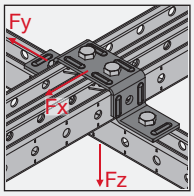  | **MT-CC-40/50x2 / MT-CC-40/50x2 OC** | - | 2,0 kN | 2,5 kN | 5,7 kN |
|  | 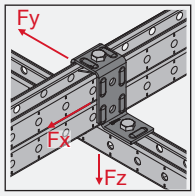  | **MT-CC-40D / MT-CC-40D OC** | - | 5,4 kN | 2,5 kN | 3,6 kN |
|  | 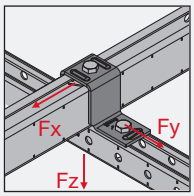  | **MT-CC-60 / MT-CC-60 OC** | - | 5,4 kN | 2,5 kN | 3,6 kN |
|  | 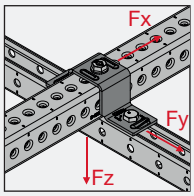  | **MT-CC-70 OC** | - | 5,4 kN | 2,5 kN | 3,6 kN |

**Design note**
- Shown load values are recommended values with partial safety factors for actions and resistance included
- Design value = 1.4 * recommended value
- The design resistance of the products is defined in accordance with EN1993

# MT Open C-channel (Strut) Connectors
Channel Clamps

## Operation Instruction
MT-CC-40/50 / MT-CC-40/50 OC

2324718-04.2021

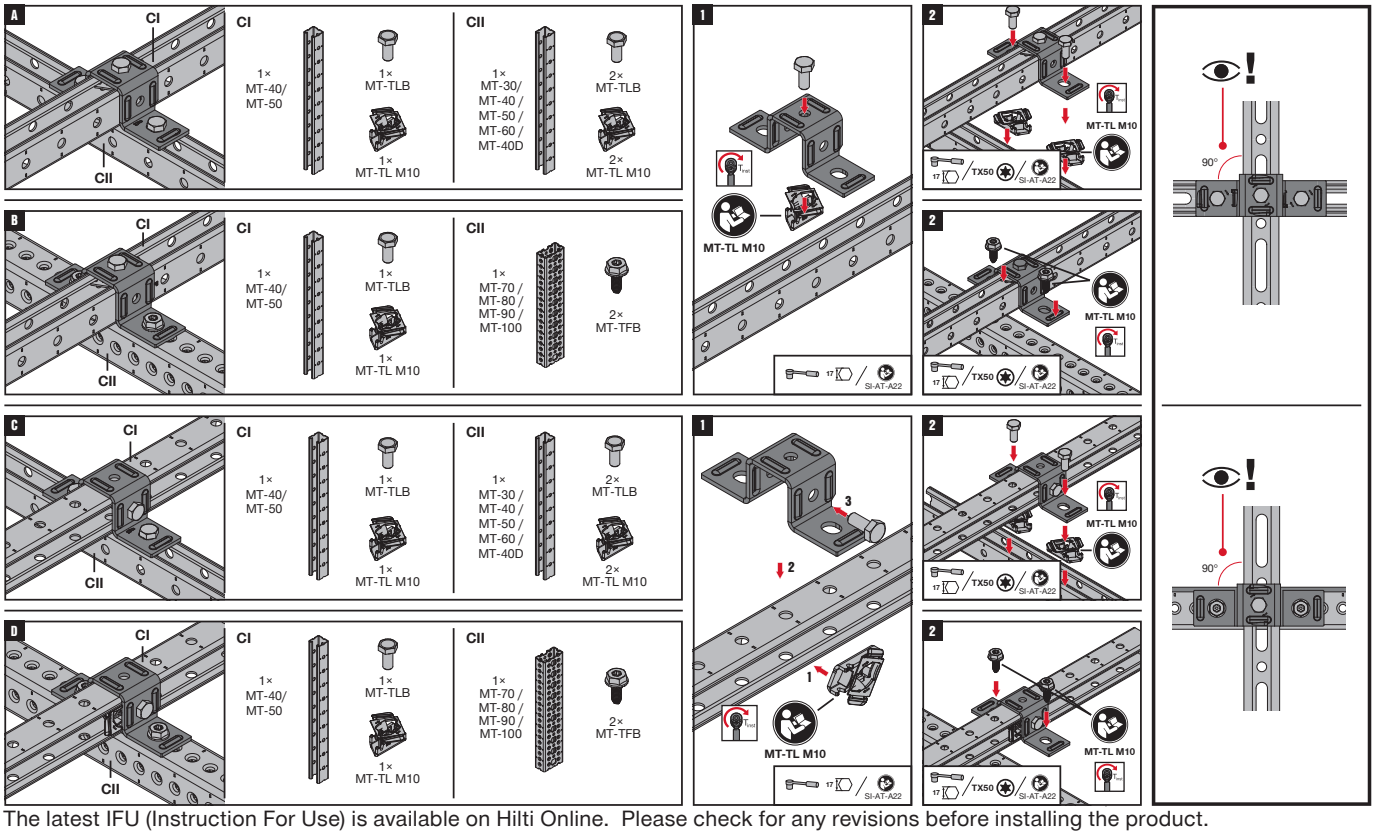


The latest IFU (Instruction For Use) is available on Hilti Online. Please check for any revisions before installing the product.

MT-CC-40/50×2 / MT-CC-40/50×2 OC

2324719-04.2021

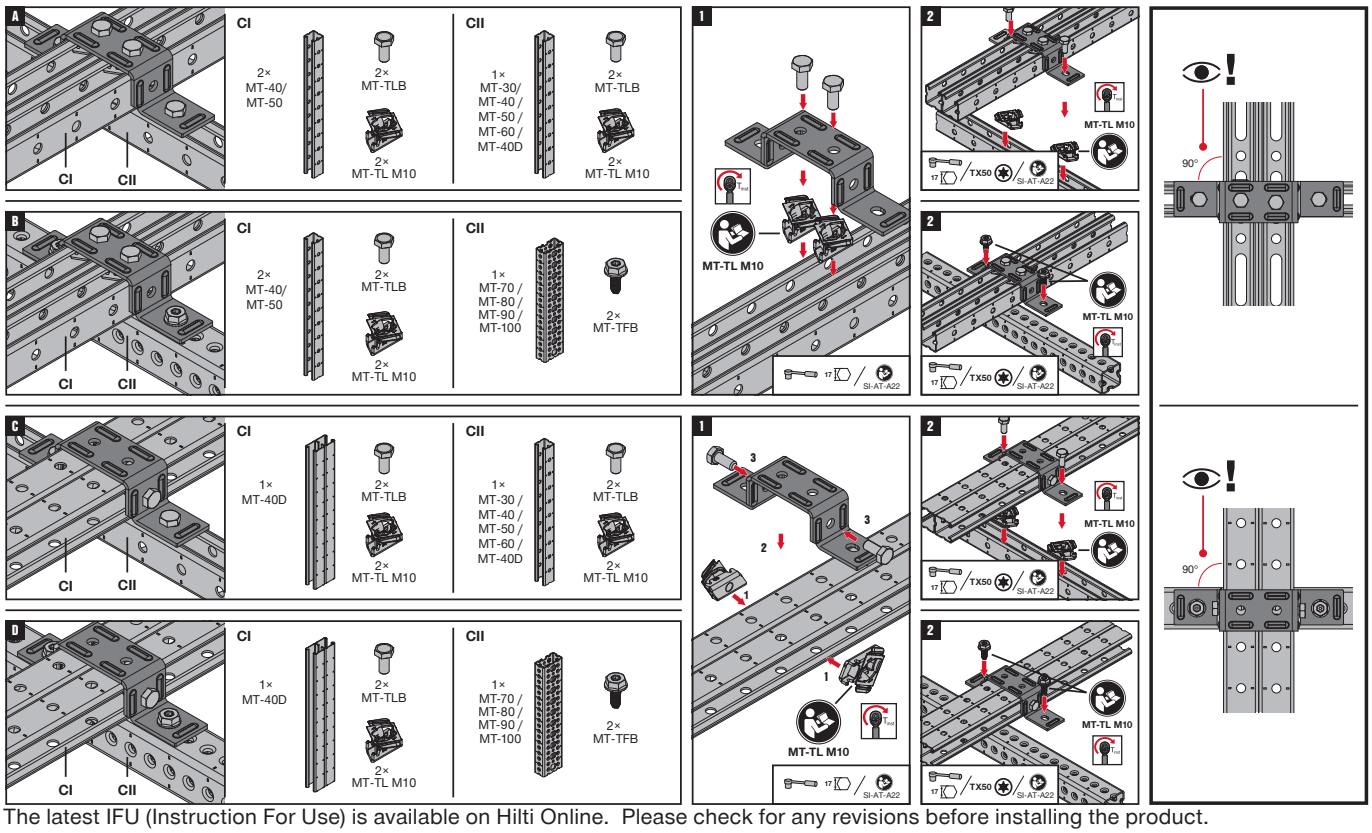


The latest IFU (Instruction For Use) is available on Hilti Online. Please check for any revisions before installing the product.

4

# MT Open C-channel (Strut) Connectors
## Channel Clamps

### Operation Instruction
MT-CC-40D / MT-CC-40D OC

2324717-04.2021

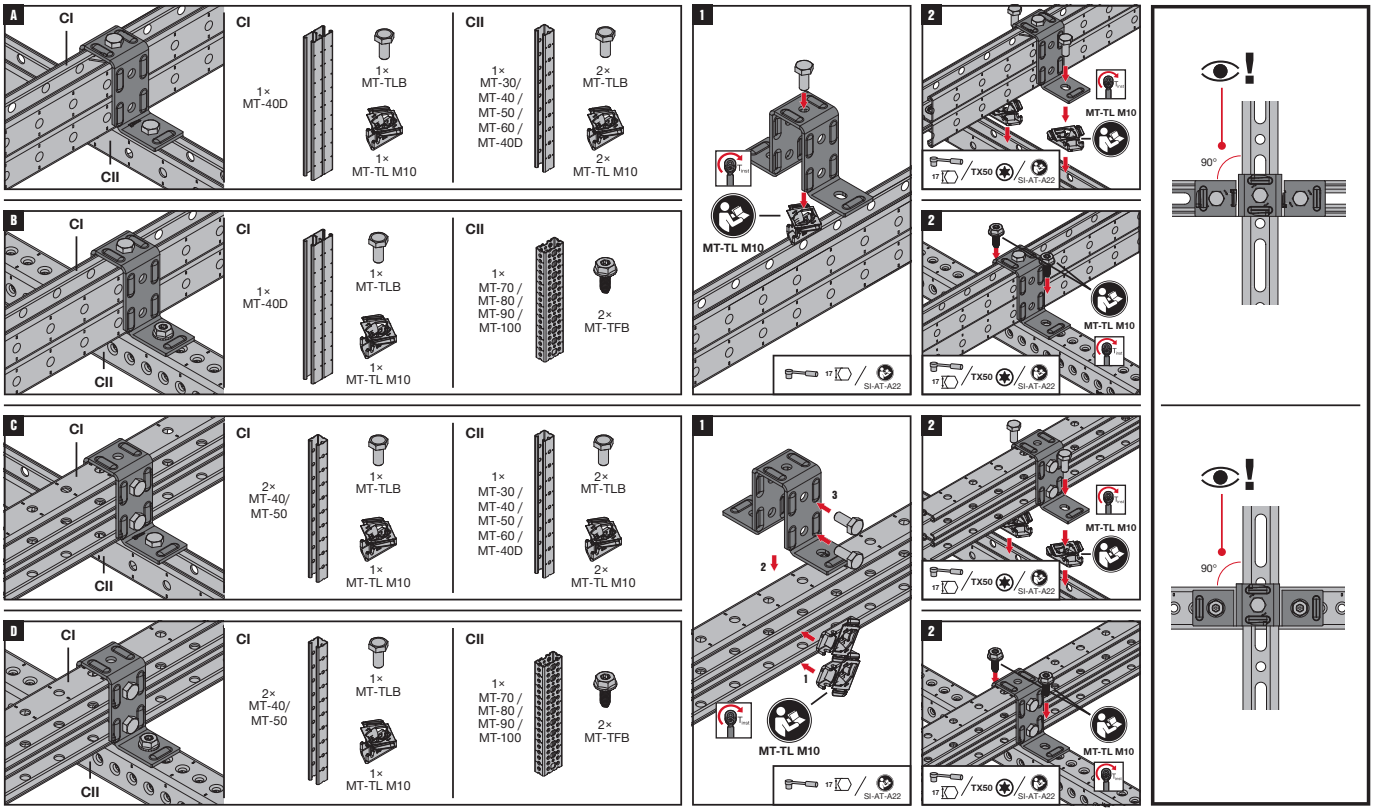


The latest IFU (Instruction For Use) is available on Hilti Online. Please check for any revisions before installing the product.

MT-CC-30 / MT-CC-40/50 / MT-CC-60 / MT-CC-30 OC / MT-CC-40/50 OC / MT-CC-60 OC

232516-04.2021

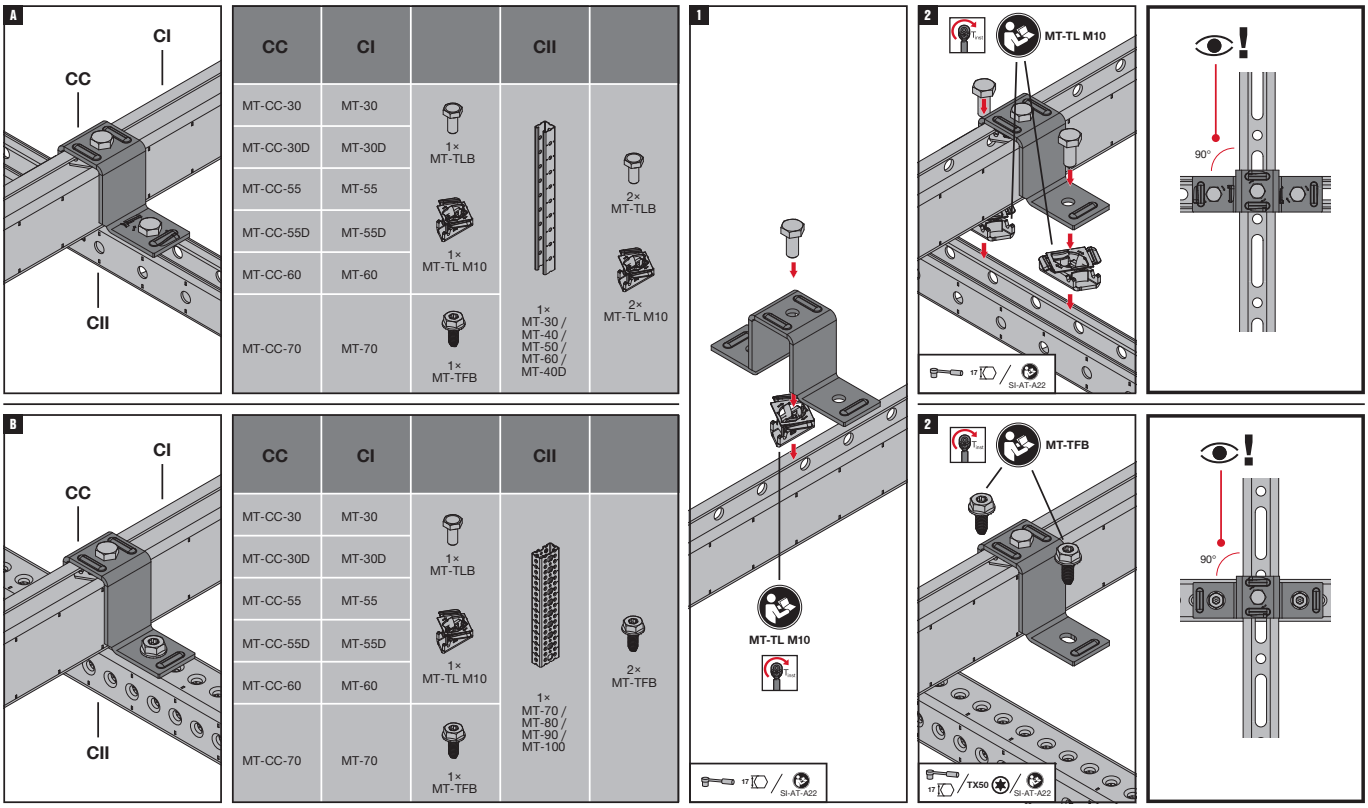


The latest IFU (Instruction For Use) is available on Hilti Online. Please check for any revisions before installing the product.

# MT Closed Profiles Connectors

## 90° Connectors - Outdoor

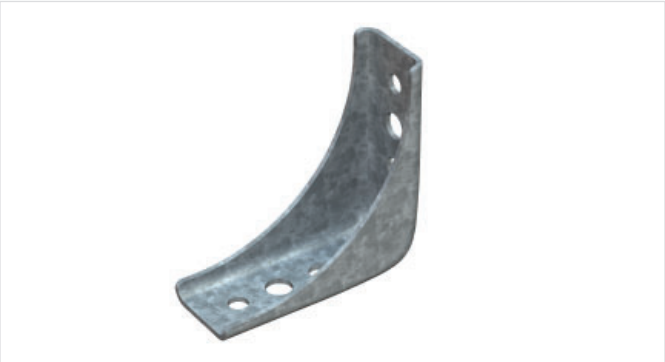

## Applications

- Right-angle connections between any MT closed profiles or strut channels
- Assembling metal framing for MEP support structures when resistance to 3D stresses is required
- Fastening MT strut channel to concrete floors, walls or ceilings

## Advantages

- Part of the Hilti MT system – an economical, all-in-one solution for virtually all modular MEP support structures
- Easy to install – one-step assembly using Hilti MT-TFB thread-forming bolts
- Adaptable – unlike welding, angle brackets allow you to modify strut channel framing during installation and for future MEP requirements
- Adjustable – cloud holes enable height adjustment in 5mm increments

## Technical data

| | |
|---|---|
| **Material composition** | Q355 or better steel |
| **Surface finish** | Hot-dip galvanized - for outdoor use |

## MT-C-GS OC Angle Connector - Outdoor

| Order Designation | Technical data | Sales pack Quantity | Item number | |
|---|---|---|---|---|
| **MT-C-GS OC** | Outdoor, low to moderate pollution (C3 / C4 - low) | 10 pc | **2272064** | 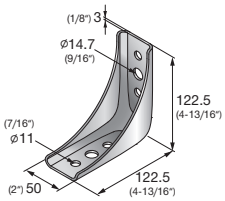  |

## MT-C-GS A OC Angle Connector - Outdoor

| Order Designation | Technical data | Sales pack Quantity | Item number | |
|---|---|---|---|---|
| **MT-C-GS A OC** | Outdoor, low to moderate pollution (C3 / C4 - low) | 10 pc | **2272068** | 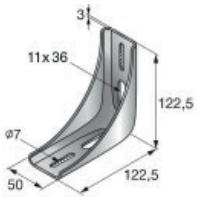  |

4

# MT Closed Profiles Connectors
## 90° Connectors - Outdoor

### MT-C-GL OC Angle Connector - Outdoor

| Order Designation | Technical data | Sales pack Quantity | Item number | |
|---|---|---|---|---|
| **MT-C-GL OC** | Outdoor, low to moderate pollution (C3 / C4 - low) | 10 pc | **2272066** | 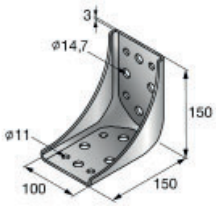  |

### MT-C-GL A OC Angle Connector - Outdoor

| Order Designation | Technical data | Sales pack Quantity | Item number | |
|---|---|---|---|---|
| **MT-C-GL A OC** | Outdoor, low to moderate pollution (C3 / C4 - low) | 10 pc | **2272069** | 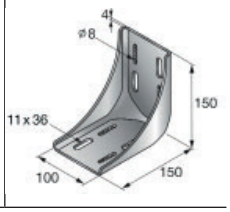  |

# MT Closed Profiles Connectors
## 90° Connectors - Outdoor

### **Technical data** MT Angle Connectors - Outdoor

| Item image | Load drawing | Order Designation | + Fz | - Fz | ± Fx | ± Fy |
|---|---|---|---|---|---|---|
| 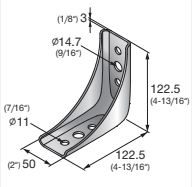  | 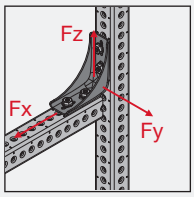  | **MT-C-GS OC** | 11,9 kN | 7,6 kN | 5,2 kN | 2,6 kN |
| 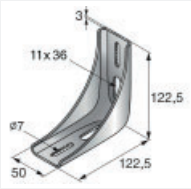  | 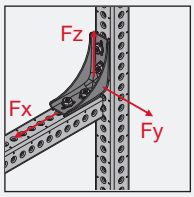  | **MT-C-GS A OC** | 11,9 kN | 7,6 kN | 5,2 kN | 2,6 kN |

**Design note**
- Shown load values are recommended values with partial safety factors for actions and resistance included
- Design value = 1.4 * recommended value
- The design resistance of the products is defined in accordance with EN1993

### **Technical data** MT Angle Connectors - Outdoor

| Item image | Load drawing | Order Designation | + Fz | - Fz | ± Fx | ± Fy |
|---|---|---|---|---|---|---|
| 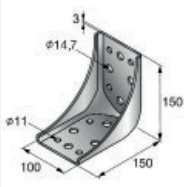  | 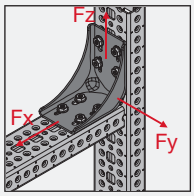  | **MT-C-GL OC** | 14,6 kN | 13,5 kN | 16,5 kN | 11,7 kN |
| 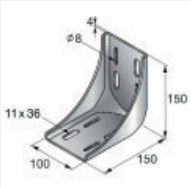  | 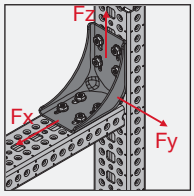  | **MT-C-GL A OC** | 14,6 kN | 13,5 kN | 16,5 kN | 11,7 kN |

**Design note**
- Shown load values are recommended values with partial safety factors for actions and resistance included
- Design value = 1.5 * recommended value
- The design resistance of the products is defined in accordance with EN1993

4

# MT Closed Profiles Connectors

## 90° Connectors - Outdoor

### Operation Instruction

MT-C-GS OC

2290665-06.2020

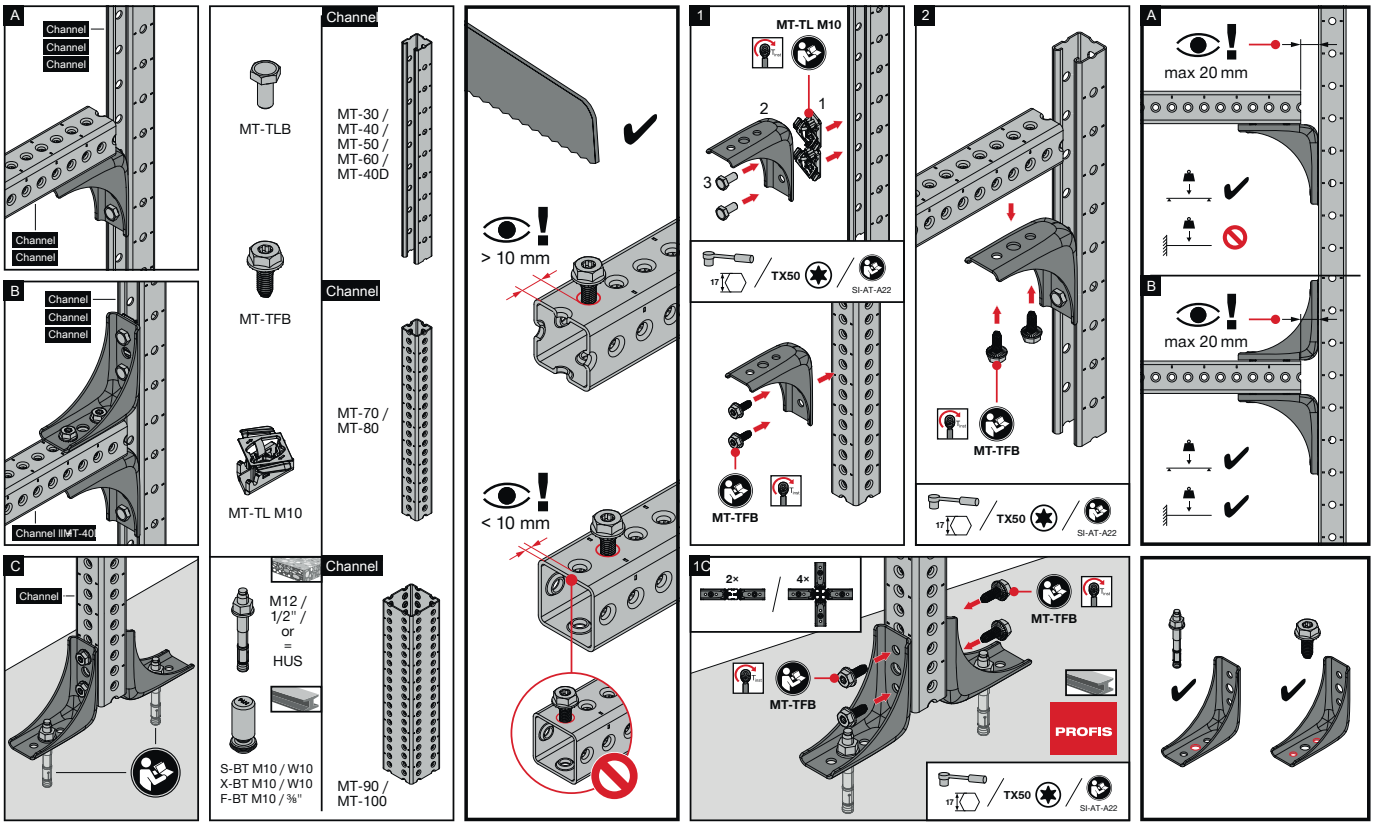


The latest IFU (Instruction For Use) is available on Hilti Online. Please check for any revisions before installing the product.

MT-C-GS A OC

2289567-09.2020

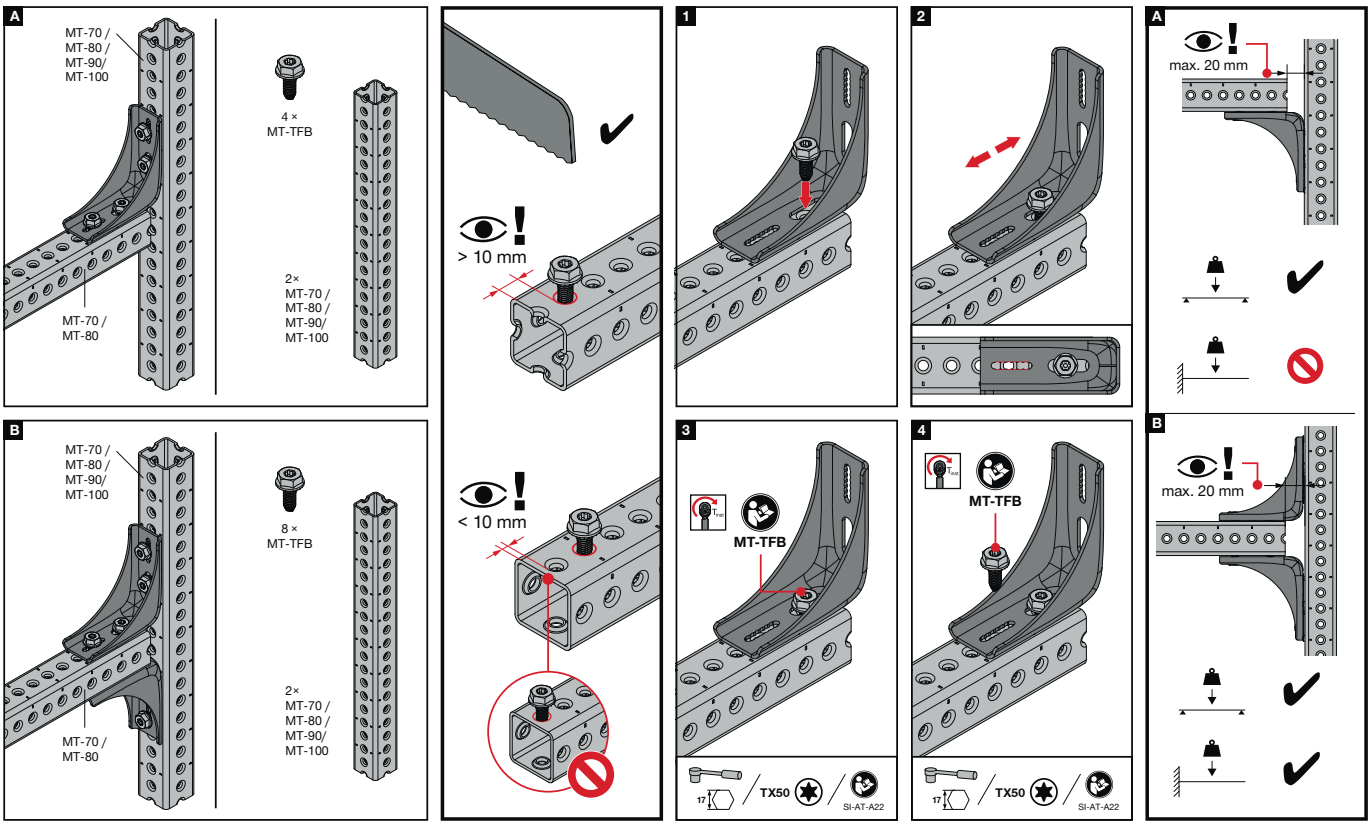


The latest IFU (Instruction For Use) is available on Hilti Online. Please check for any revisions before installing the product.

# MT Closed Profiles Connectors

90° Connectors - Outdoor

## Operation Instruction

MT-C-GL OC

2289566-07.2020

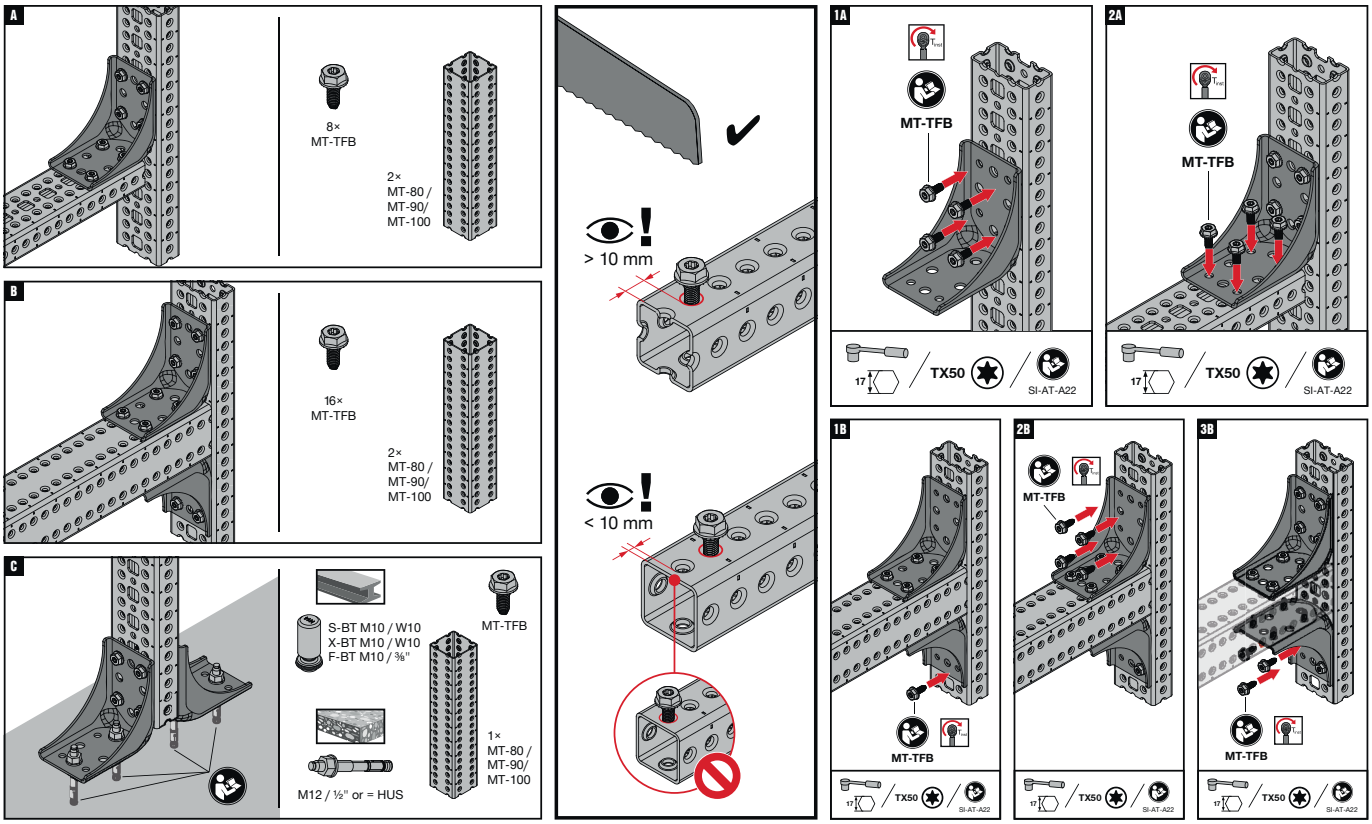


The latest IFU (Instruction For Use) is available on Hilti Online. Please check for any revisions before installing the product.

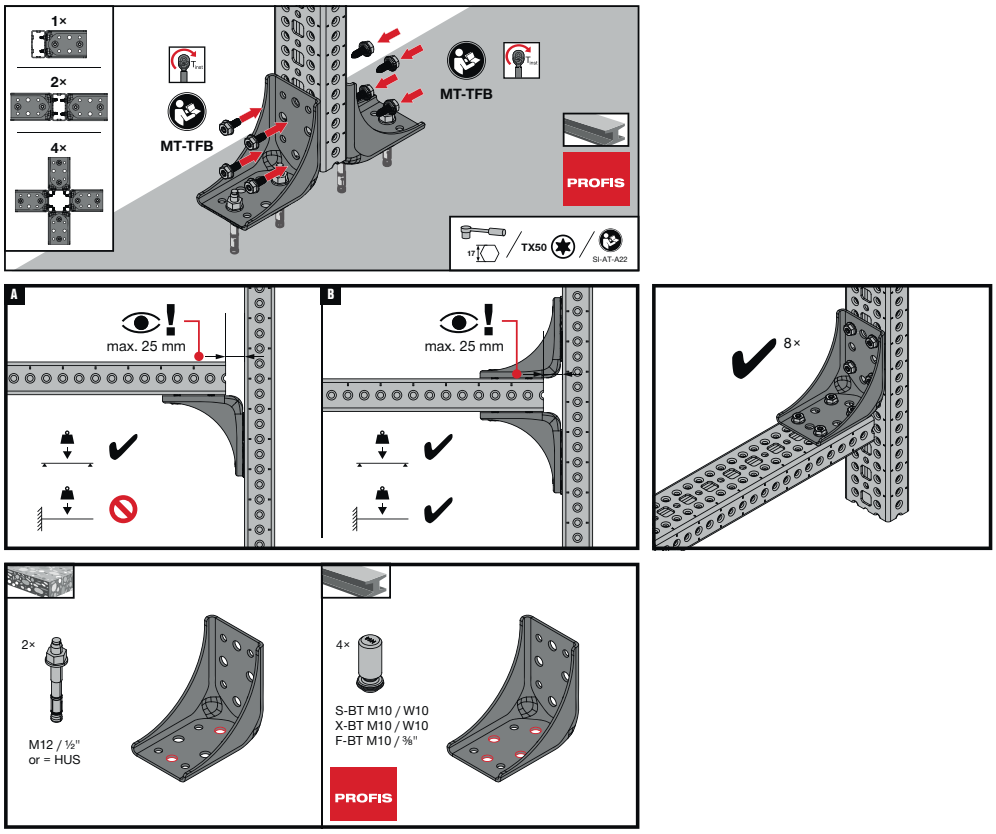


The latest IFU (Instruction For Use) is available on Hilti Online. Please check for any revisions before installing the product.

4

# MT Closed Profiles Connectors

## 90° Connectors - Outdoor

### Operation Instruction

MT-C-GL A OC

2289568-09.2020

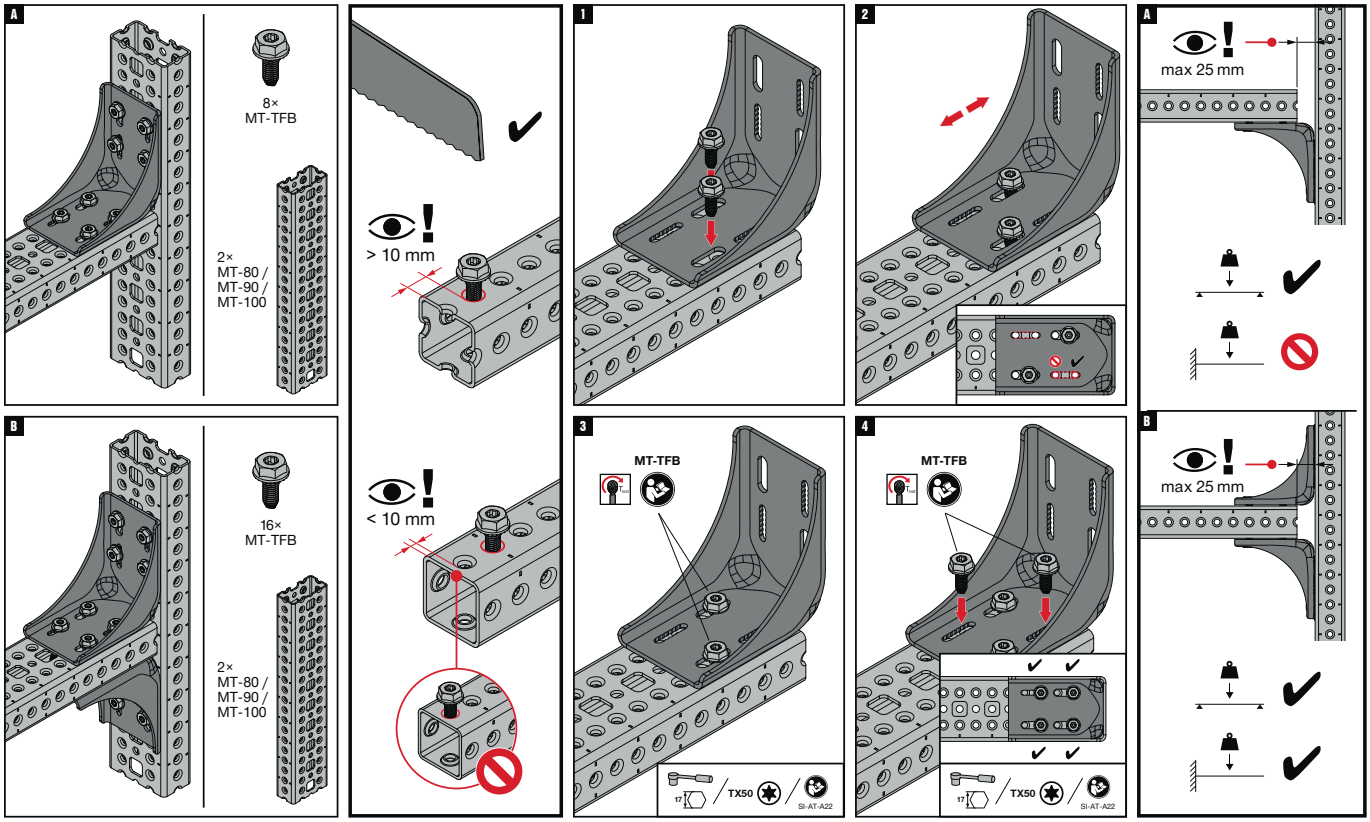


The latest IFU (Instruction For Use) is available on Hilti Online. Please check for any revisions before installing the product.

# MT Closed Profiles Connectors

## 90° Connectors - Outdoor

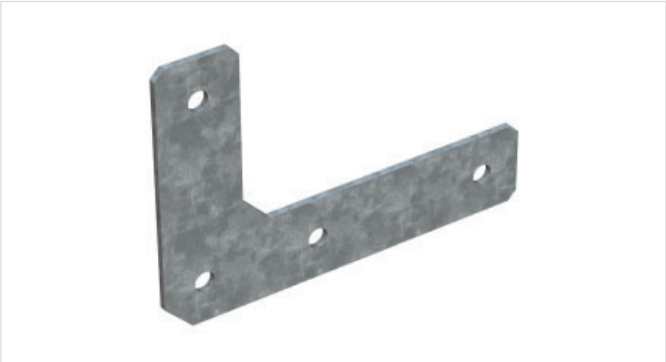

## Applications

- Fastening L-shaped connections between any MT closed profiles or strut channels
- Suitable for use in moderately corrosive environments

## Technical data

| | |
|---|---|
| **Material composition** | Q355 or better steel |
| **Surface finish** | Hot-dip galvanized - for outdoor use |

## Advantages

- Part of the Hilti MT system – an economical, all-in-one solution for virtually all modular MEP support structures
- Easy to install – one-step assembly using Hilti MT-TFB thread-forming bolts
- Adaptable – unlike welding, gusset plates allow modular metal framing to be modified during installation and for future MEP requirements
- Adjustable – cloud holes enable height adjustment in 5mm increments

### MT-C-GSP L OC Connector - Outdoor

| Order Designation | Technical data | Sales pack Quantity | Item number | |
|---|---|---|---|---|
| **MT-C-GSP L OC** | Outdoor, low to moderate pollution (C3 / C4 - low) | 10 pc | **2272073** | 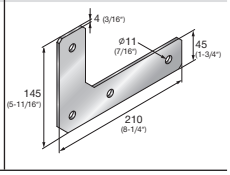  |

### MT-C-GSP L A OC Connector - Outdoor

| Order Designation | Technical data | Sales pack Quantity | Item number | |
|---|---|---|---|---|
| **MT-C-GSP L A OC** | Outdoor, low to moderate pollution (C3 / C4 - low) | 10 pc | **2332786** | 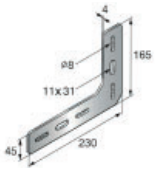  |

4

# MT Closed Profiles Connectors
## 90° Connectors - Outdoor

### MT-C-GSP T OC Angle Connector - Outdoor

| Order Designation | Technical data | Sales pack Quantity | Item number | |
|---|---|---|---|---|
| **MT-C-GSP T OC** | Outdoor, low to moderate pollution (C3 / C4 - low) | 10 pc | **2272074** | 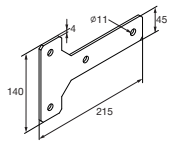  |

### MT-C-GSP T A OC Angle Connector - Outdoor

| Order Designation | Technical data | Sales pack Quantity | Item number | |
|---|---|---|---|---|
| **MT-C-GSP T A OC** | Outdoor, low to moderate pollution (C3 / C4 - low) | 10 pc | **2332785** | 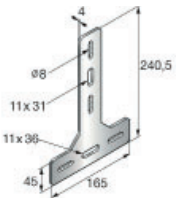  |

### MT-C-GLP T OC Angle Connector - Outdoor

| Order Designation | Technical data | Sales pack Quantity | Item number | |
|---|---|---|---|---|
| **MT-C-GLP T OC** | Outdoor, low to moderate pollution (C3 / C4 - low) | 8 pc | **2272075** | 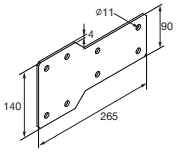  |

### MT-C-GLP T A OC Angle Connector - Outdoor

| Order Designation | Technical data | Sales pack Quantity | Item number | |
|---|---|---|---|---|
| **MT-C-GLP T A OC** | Outdoor, low to moderate pollution (C3 / C4 - low) | 8 pc | **2332784** | 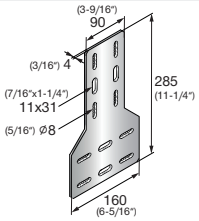  |

### MT-C-GLP X A OC Angle Connector - Outdoor

| Order Designation | Technical data | Sales pack Quantity | Item number | |
|---|---|---|---|---|
| **MT-C-GLP X A OC** | Outdoor, low to moderate pollution (C3 / C4 - low) | 10 pc | **2332783** | 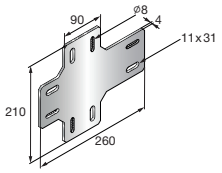  |

# MT Closed Profiles Connectors
## 90° Connectors - Outdoor

### **Technical data** MT Connectors

| Item image | Load drawing | Order Designation | + Fz | - Fz | ± Fx | ± Fy |
|---|---|---|---|---|---|---|
|  | 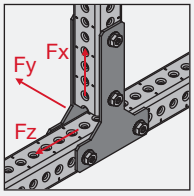  | **MT-C-GSP T OC** | 7,1 kN | 7,1 kN | 46,7 kN | 5,9 kN |

**Design note**
- Shown load values are recommended values with partial safety factors for actions and resistance included
- Design value = 1.4 * recommended value
- The design resistance of the products is defined in accordance with EN1993

### **Technical data** MT Connectors

| Item image | Load drawing | Order Designation | + Fz | - Fz | ± Fx | ± Fy |
|---|---|---|---|---|---|---|
|  | 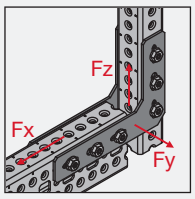  | **MT-C-GSP L A OC** | 14,0 kN | 14,3 kN | 19,8 kN | 2,6 kN |
|  | 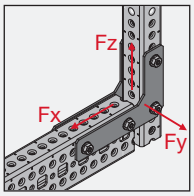  | **MT-C-GSP L OC** | 10,9 kN | 11,1 kN | 13,7 kN | 3,5 kN |
|  | 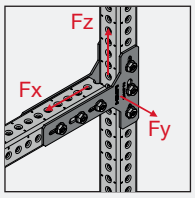  | **MT-C-GSP T A OC** | 16,8 kN | 16,8 kN | 33,4 kN | 2,1 kN |
|  | 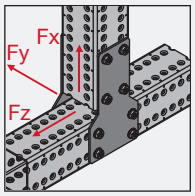  | **MT-C-GLP T OC** | 25,0 kN | 25,0 kN | 86,7 kN | 8,4 kN |

**Design note**
- Shown load values are recommended values with partial safety factors for actions and resistance included
- Design value = 1.5 * recommended value
- The design resistance of the products is defined in accordance with EN1993

# MT Closed Profiles Connectors

## 90° Connectors - Outdoor



### **Technical data** MT Connectors

| Item image | Load drawing | Order Designation | + Fz | - Fz | ± Fx | ± Fy |
|---|---|---|---|---|---|---|
|  | 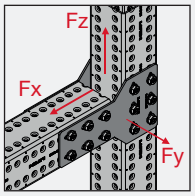  | **MT-C-GLP T A OC** | 24,7 kN | 24,7 kN | 66,1 kN | 4,3 kN |

**Konstruktionshinweis:**
- Die dargestellten Lastwerte sind empfohlene Widerstände, welche die Teilsicherheitsbeiwert für die Einwirkungen und den Widerstand bereit inkludiert haben.
- Design Widerstand = 1,5 * empfohlener Widerstand
- Die Design Widerstände sind gemäß EN 1993 ermittelt

**Design note**
- Shown load values are recommended values with partial safety factors for actions and resistance included
- Design value = 1.5 * recommended value
- The design resistance of the products is defined in accordance with EN1993

# MT Closed Profiles Connectors

## 90° Connectors - Outdoor

### Operation Instruction

MT-C-GSP L OC

2289569-07.2020

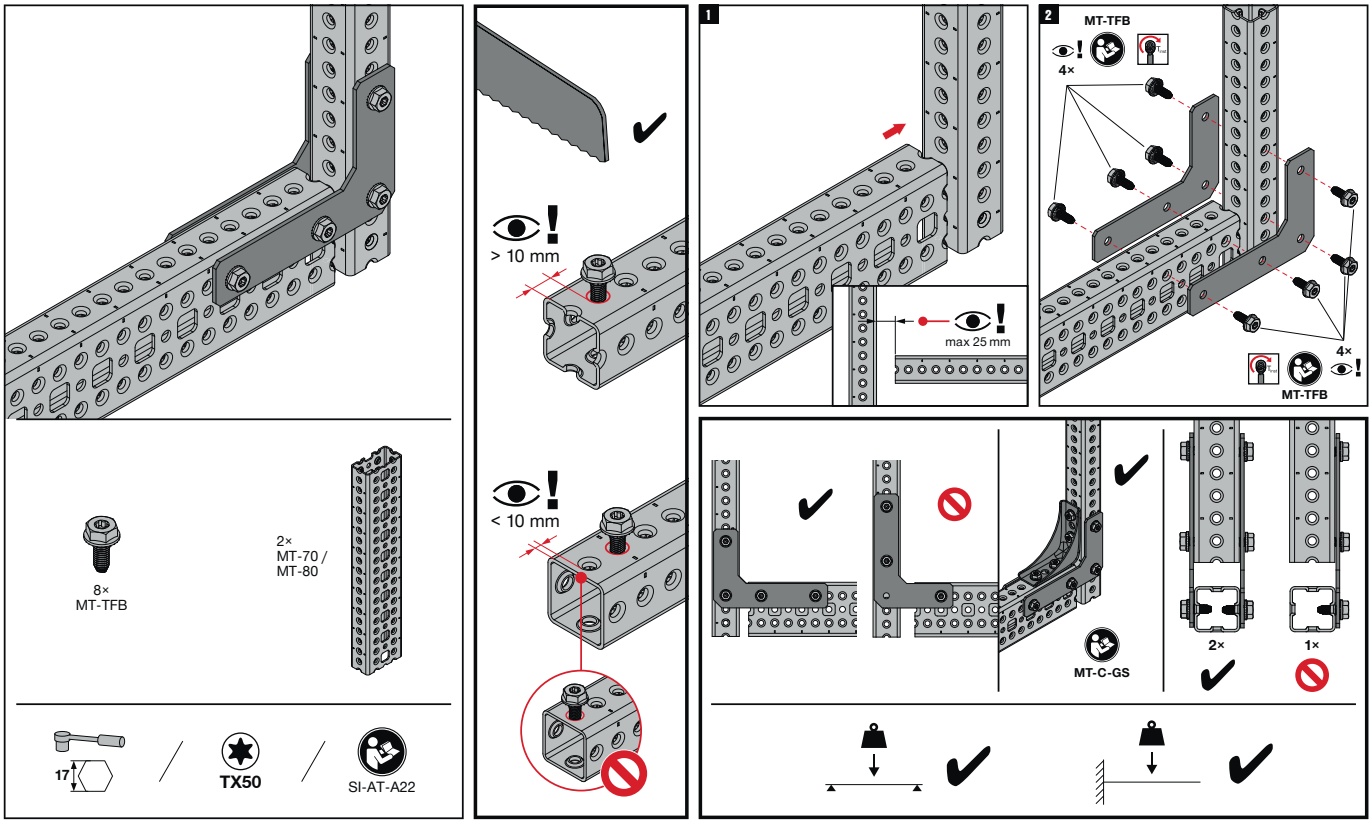


The latest IFU (Instruction For Use) is available on Hilti Online. Please check for any revisions before installing the product.

MT-C-GSP L A OC

2334573-07.2021

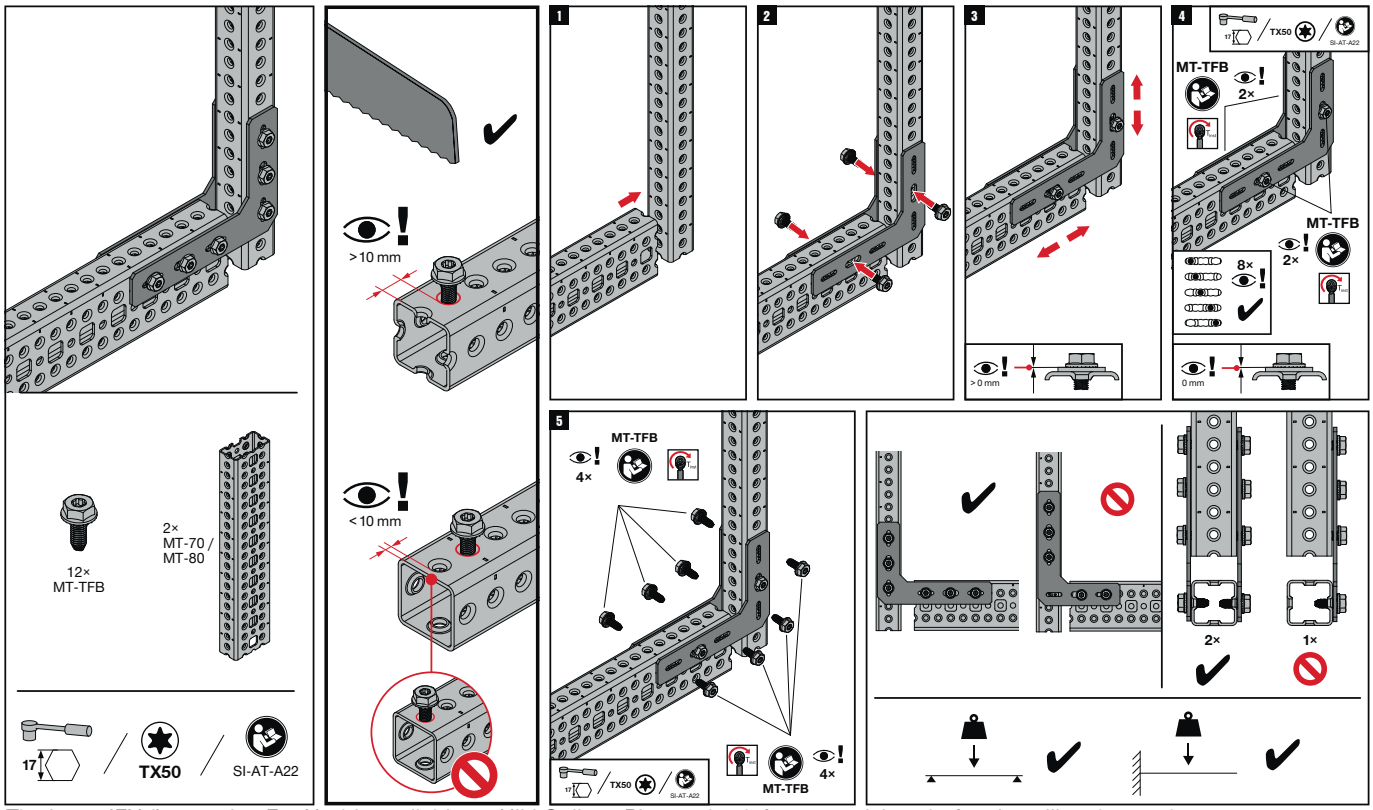


The latest IFU (Instruction For Use) is available on Hilti Online. Please check for any revisions before installing the product.

4

# MT Closed Profiles Connectors

## 90° Connectors - Outdoor

### Operation Instruction

MT-C-GSP T OC

2290690-06.2020

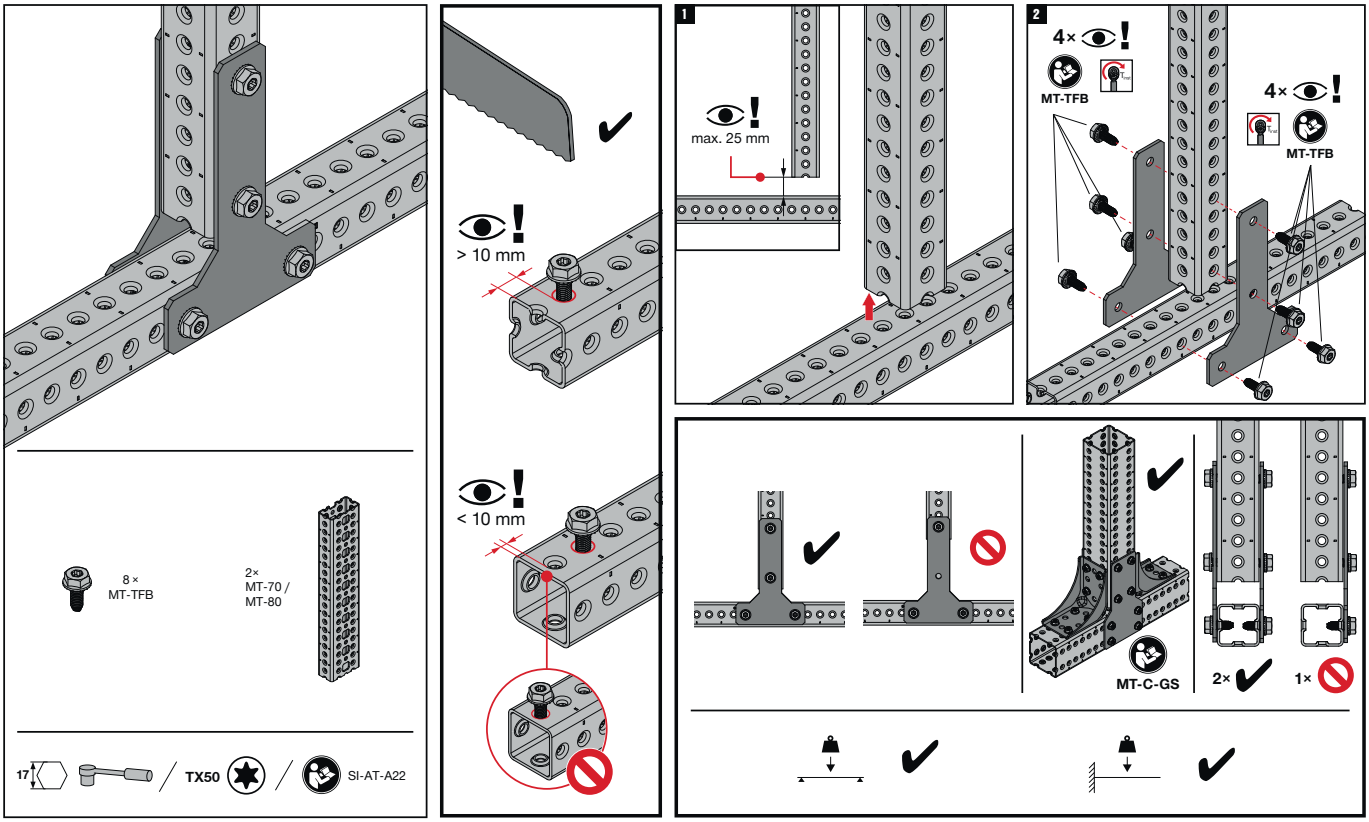


The latest IFU (Instruction For Use) is available on Hilti Online. Please check for any revisions before installing the product.

MT-C-GSP T A OC

2334586-07.2021

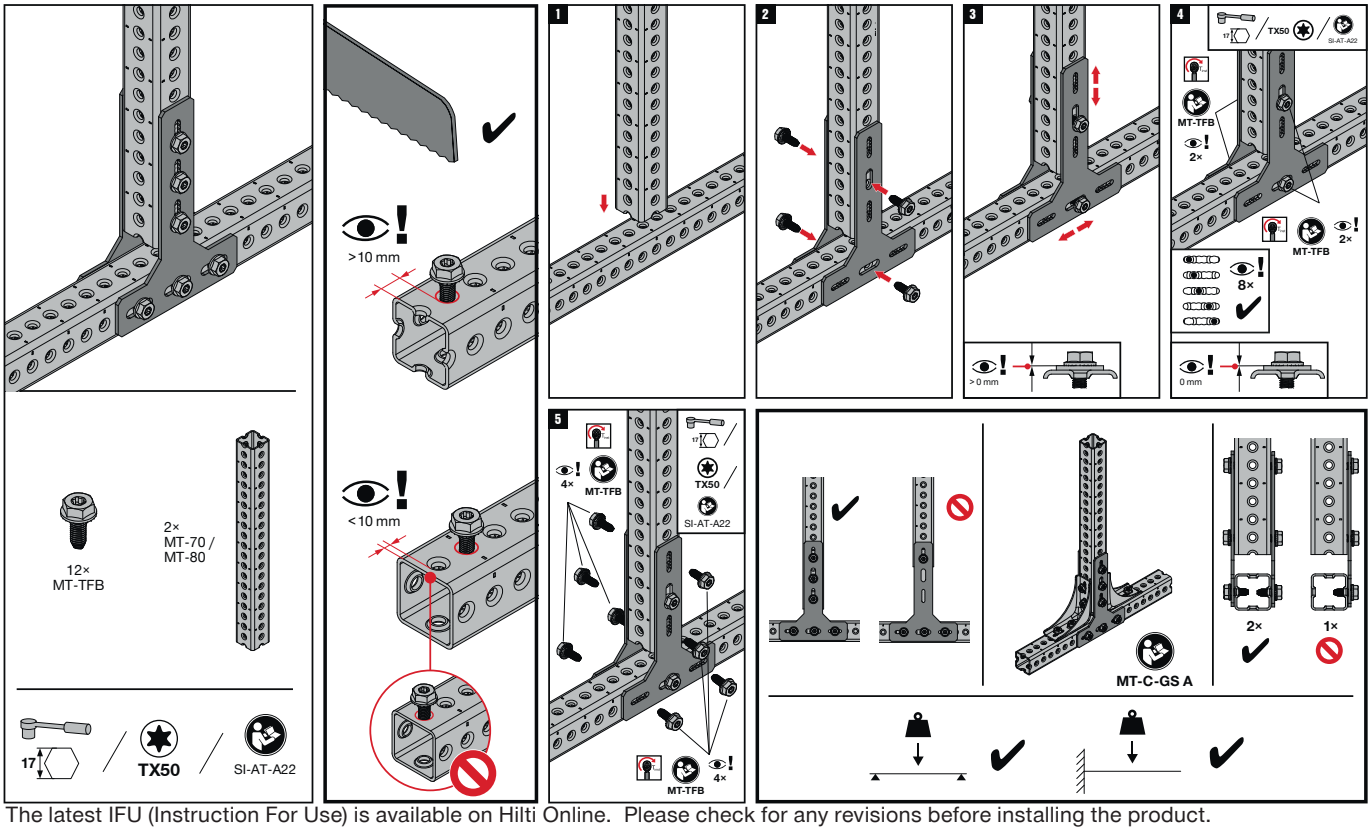


The latest IFU (Instruction For Use) is available on Hilti Online. Please check for any revisions before installing the product.

# MT Closed Profiles Connectors

## 90° Connectors - Outdoor

### Operation Instruction

MT-C-GLP T OC

2290691-06.2020

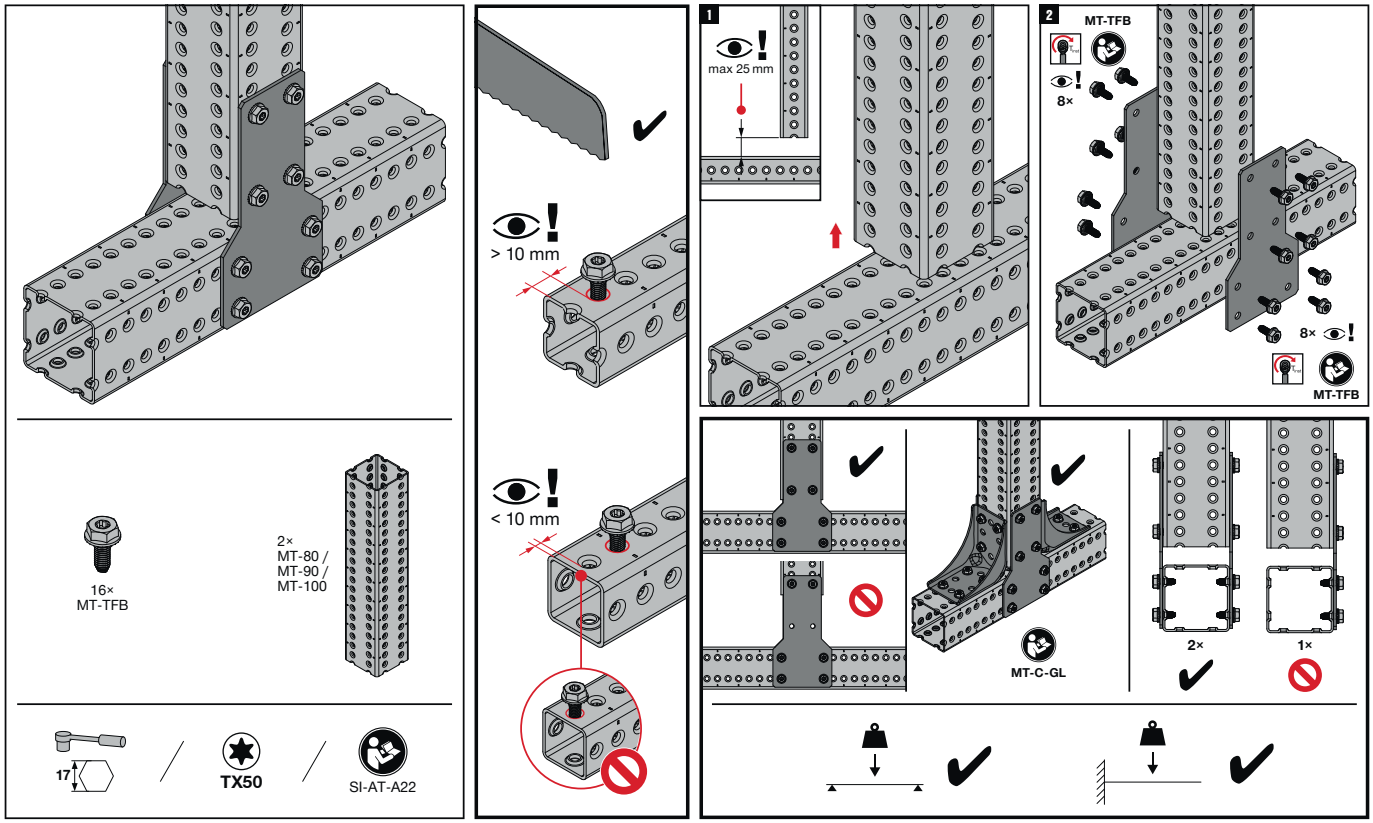


The latest IFU (Instruction For Use) is available on Hilti Online. Please check for any revisions before installing the product.

MT-C-GLP T A OC

2334585-07.2021

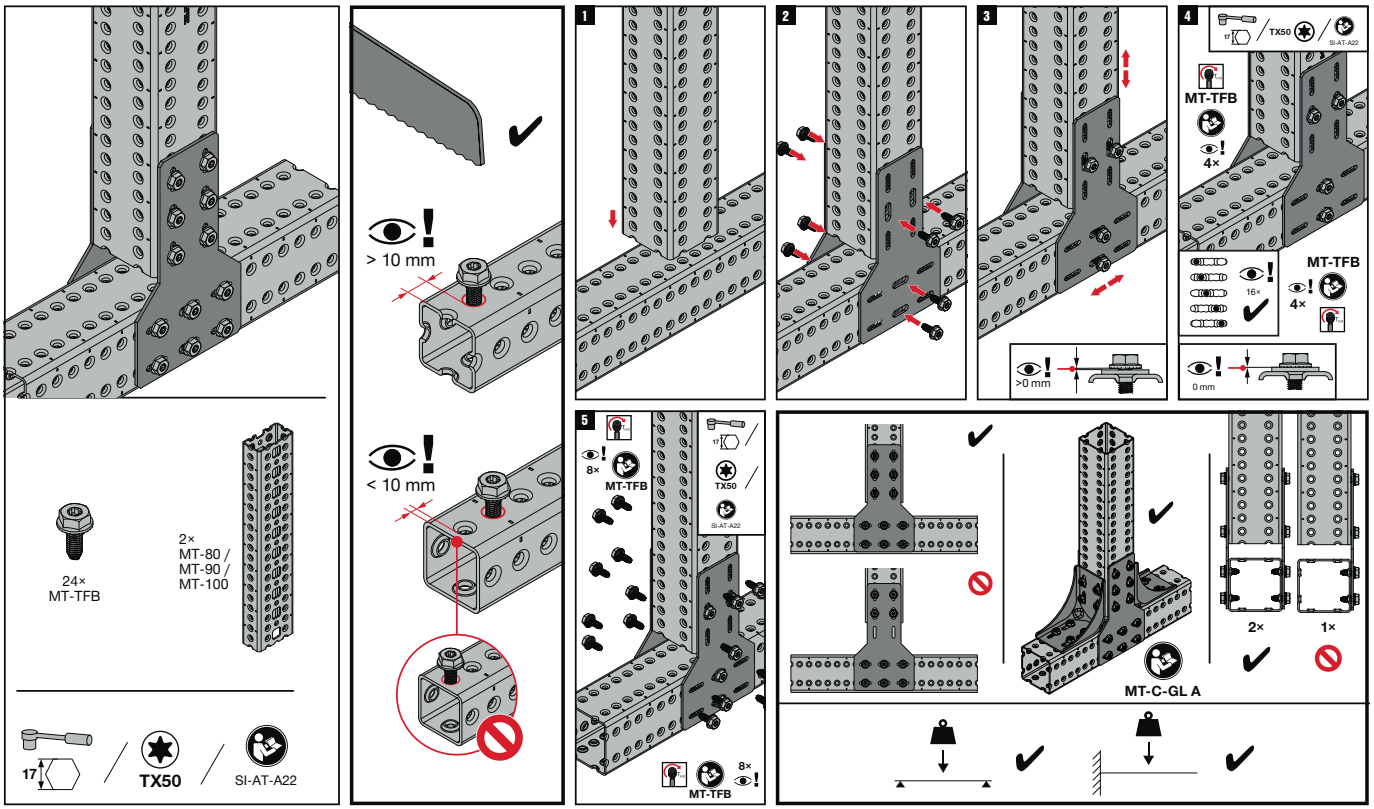


The latest IFU (Instruction For Use) is available on Hilti Online. Please check for any revisions before installing the product.

4

# MT Closed Profiles Connectors

90° Connectors - Outdoor

## Operation Instruction

MT-C-GLP X A OC

2334584-07.2021

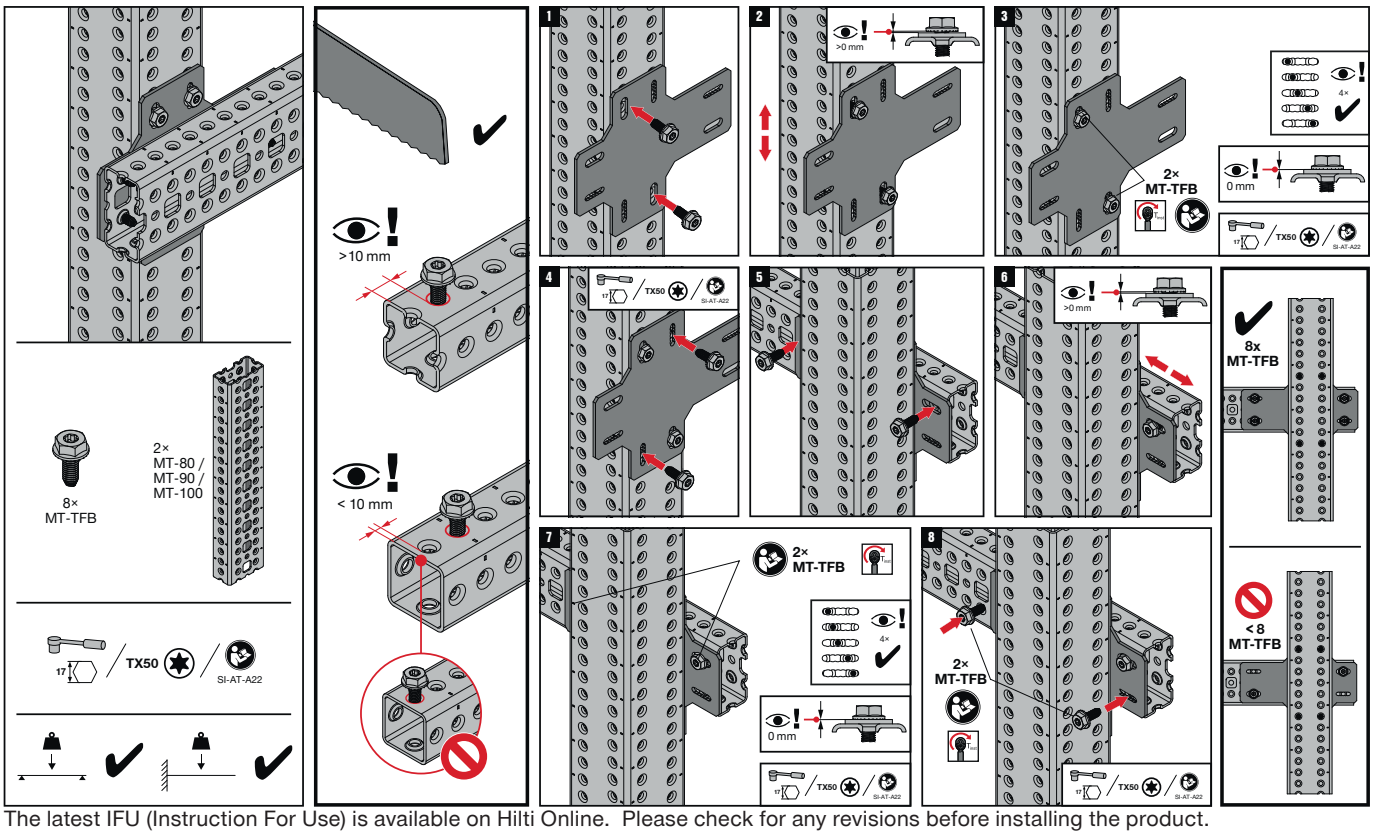


The latest IFU (Instruction For Use) is available on Hilti Online. Please check for any revisions before installing the product.

# MT Closed Profiles Connectors

## Splice Connectors - Outdoor

## Applications

- Extending MT-70 or MT-80 closed profiles by fastening them together end-to-end
- Assembling metal framing for MEP support structures when longer spans or increased floor/ceiling clearance are required
- Suitable for use in moderately corrosive environments

## Advantages

- Part of the Hilti MT system – an economical, all-in-one solution for virtually all modular MEP support structures
- Easy to install – one-step assembly using Hilti MT-TFB thread-forming bolts
- Adaptable – unlike welding, splice clevises allow modular metal framing to be modified for future MEP requirements

## Technical data

| | |
|---|---|
| **Material composition** | Q355 or better steel |
| **Surface finish** | Hot-dip galvanized - for outdoor use |

### MT-ES-70 OC Splice Connector - Outdoor

| Order Designation | Technical data | Sales pack Quantity | Item number | |
|---|---|---|---|---|
| **MT-ES-70 OC** | Outdoor, low to moderate pollution (C3 / C4 - low) | 8 pc | **2272078** | 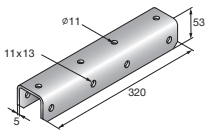  |

### MT-ES-90 OC Splice Connector - Outdoor

| Order Designation | Technical data | Sales pack Quantity | Item number | |
|---|---|---|---|---|
| **MT-ES-90 OC** | Outdoor, low to moderate pollution (C3 / C4 - low) | 4 pc | **2272076** | 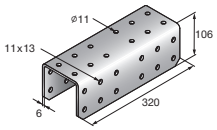  |

4

# MT Closed Profiles Connectors
## Splice Connectors - Outdoor

### **Technical data** MT Splice Connector

| Item image | Load drawing | Order Designation | + Fz | - Fz | ± Fx | ± Fy | ± My |
|---|---|---|---|---|---|---|---|
|  | 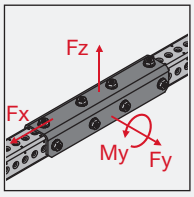  | **MT-ES-70 OC** | 1,7 kN | 1,7 kN | 26,3 kN | 2,3 kN | 1,63 kNm |
|  | 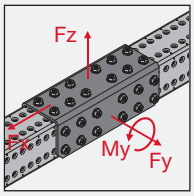  | **MT-ES-90 OC** | 5,0 kN | 4,7 kN | 44,3 kN | 4,7 kN | 3,5 kNm |

**Design note**
- Shown load values are recommended values with partial safety factors for actions and resistance included
- Design value = 1.5 * recommended value
- The design resistance of the products is defined in accordance with EN1993

# MT Closed Profiles Connectors

## Splice Connectors - Outdoor

### Operation Instruction

MT-ES-70 OC

2290693-06.2020

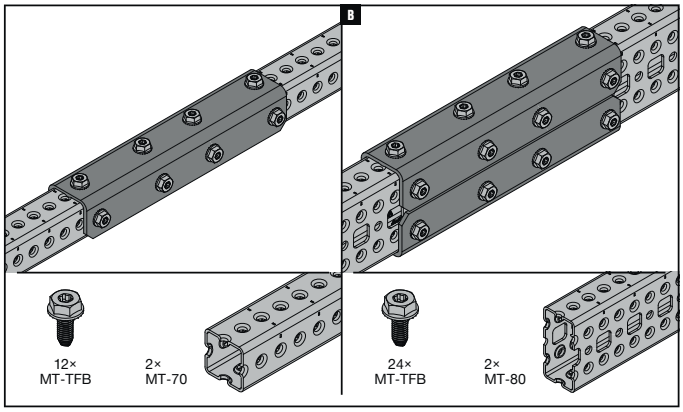


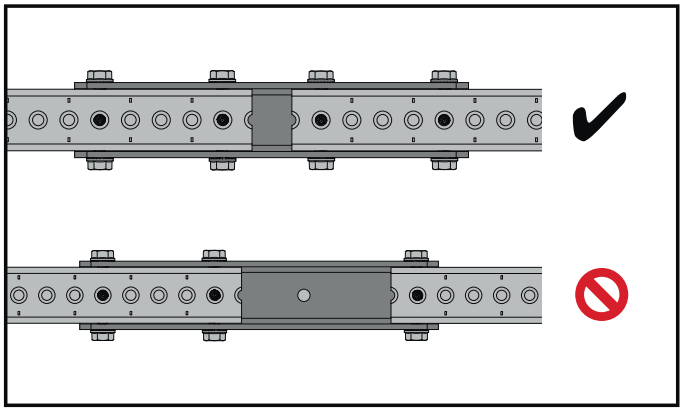

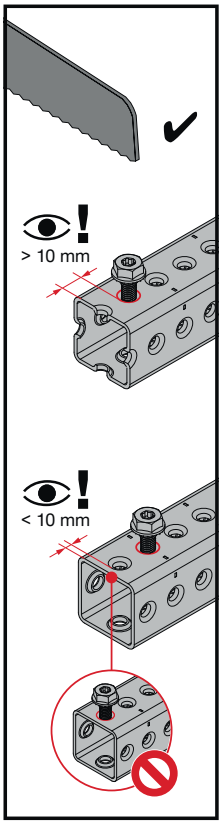


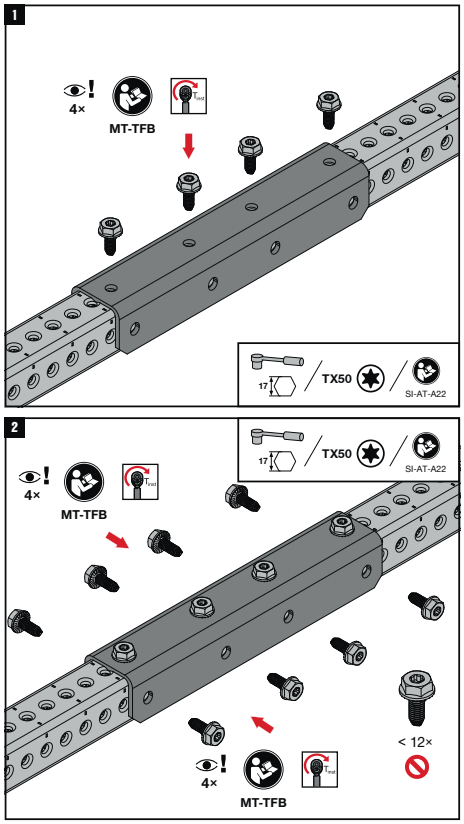


The latest IFU (Instruction For Use) is available on Hilti Online. Please check for any revisions before installing the product.

MT-ES-90 OC

2290692-06.2020

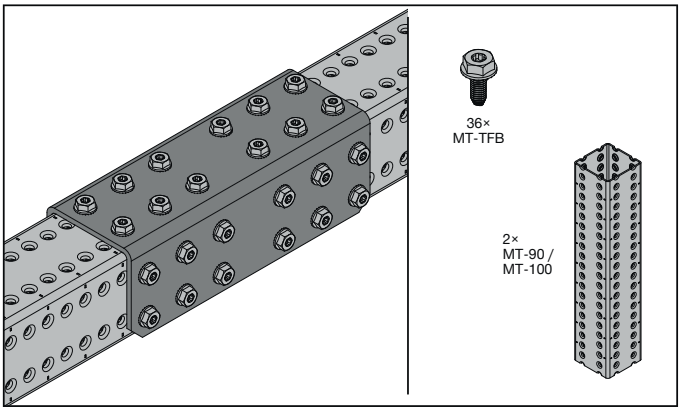


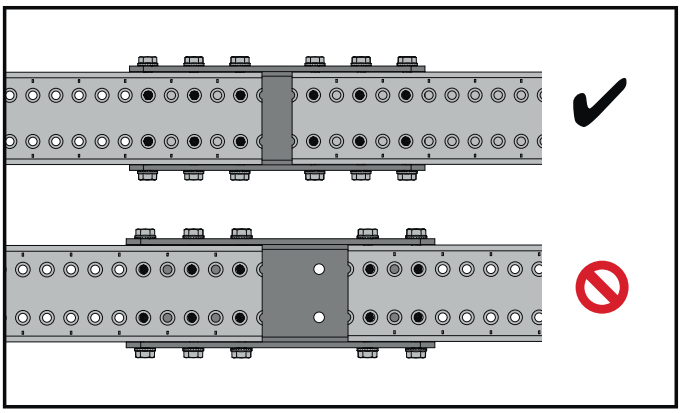

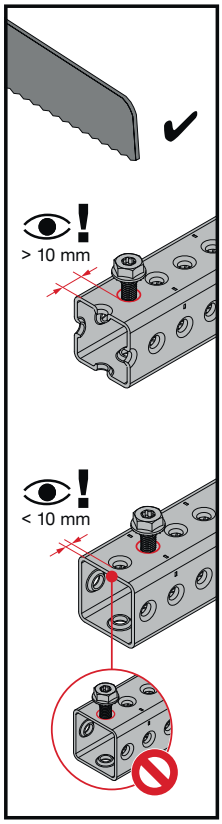


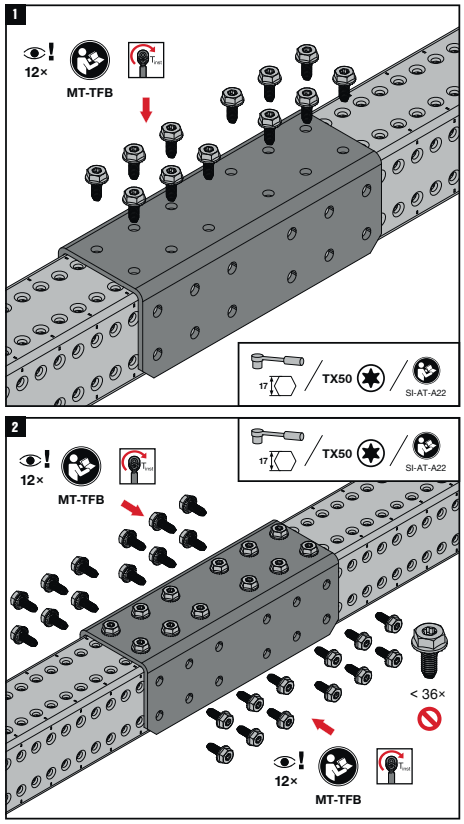


The latest IFU (Instruction For Use) is available on Hilti Online. Please check for any revisions before installing the product.

# MT Channel Clamp - Outdoor

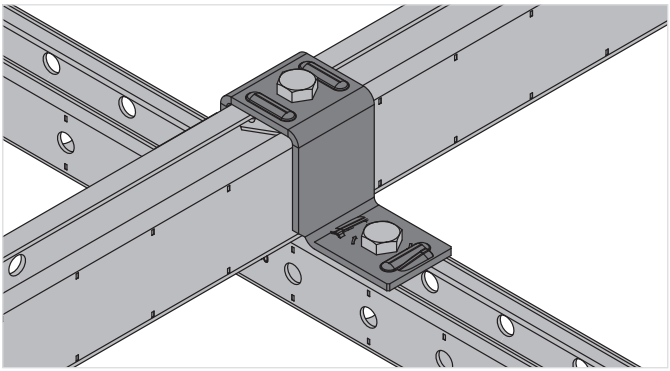

## Applications

- Cross-connection of one strut girder to another channel or girder
- Suitable for use in moderately corrosive environments

## Advantages

- Compatible with MT Twist-Lock and MT Thread Forming Bolt channel connectors – for much faster, adaptable assembly
- Universal – complete many different applications using few parts
- Twist-lock and Thread Forming Bolt channel connector takes up shear and tensile loads

## Technical data

| | |
|---|---|
| **Material composition** | Q355 or better steel |
| **Surface finish** | Hot-dip galvanized - for outdoor use |

## MT-CC-70 OC Channel Clamp - Outdoor

| Order Designation | Technical data | Sales pack Quantity | Item number | |
|---|---|---|---|---|
| **MT-CC-70 OC** | Outdoor, low to moderate pollution (C3 / C4 - low) | 16 pc | **2322404** | 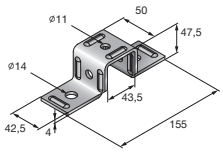  |

## **Technical data** Channel Clamp

| Item image | Load drawing | Order Designation | + Fz | - Fz | ± Fx | ± Fy |
|---|---|---|---|---|---|---|
|  | 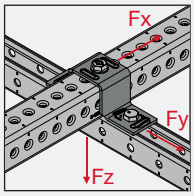  | **MT-CC-70 OC** | - | 5,4 kN | 2,5 kN | 3,6 kN |

**Design note**
- Shown load values are recommended values with partial safety factors for actions and resistance included
- Design value = 1.4 * recommended value
- The design resistance of the products is defined in accordance with EN1993

# MT Channel Clamps - Outdoor

## Operation Instruction

MT-CC-70

232516-04.2021

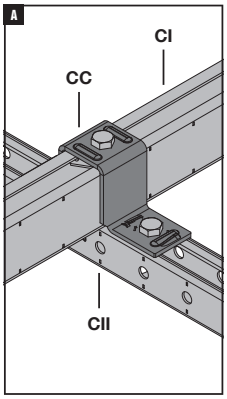


| CC | CI | | CII | |
|---|---|---|---|---|
| MT-CC-30 | MT-30 | 1× MT-TLB<br>1× MT-TL M10 | 1× MT-30 / MT-40 / MT-50 / MT-60 / MT-40D | 2× MT-TLB<br>2× MT-TL M10 |
| MT-CC-30D | MT-30D | | | |
| MT-CC-55 | MT-55 | | | |
| MT-CC-55D | MT-55D | | | |
| MT-CC-60 | MT-60 | | | |
| MT-CC-70 | MT-70 | 1× MT-TFB | | |

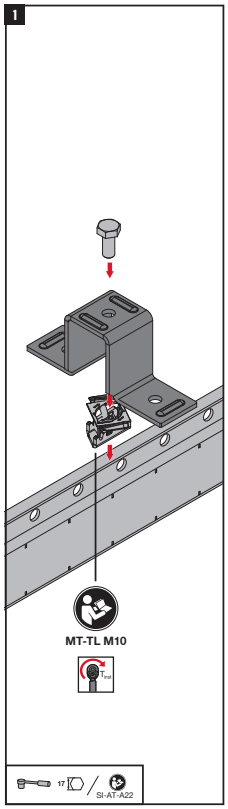


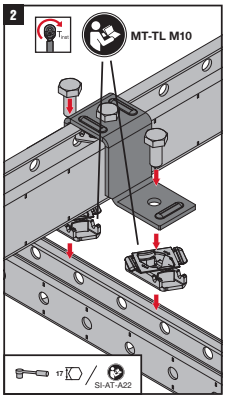


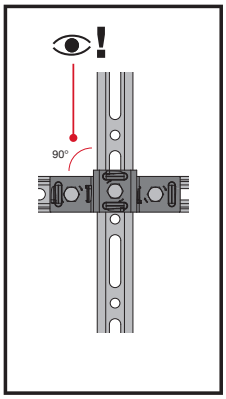


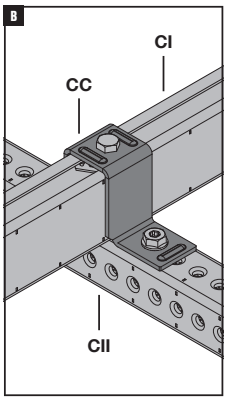


| CC | CI | | CII | |
|---|---|---|---|---|
| MT-CC-30 | MT-30 | 1× MT-TLB<br>1× MT-TL M10 | 1× MT-70 / MT-80 / MT-90 / MT-100 | 2× MT-TFB |
| MT-CC-30D | MT-30D | | | |
| MT-CC-55 | MT-55 | | | |
| MT-CC-55D | MT-55D | | | |
| MT-CC-60 | MT-60 | | | |
| MT-CC-70 | MT-70 | 1× MT-TFB | | |

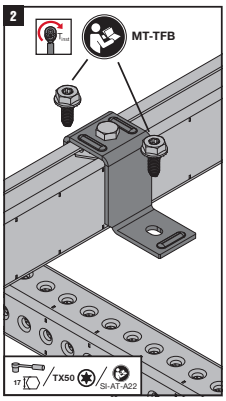


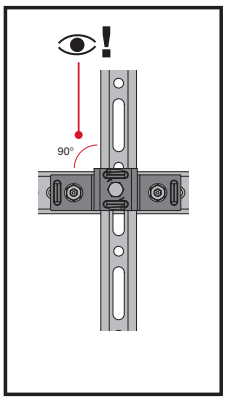


The latest IFU (Instruction For Use) is available on Hilti Online. Please check for any revisions before installing the product.

4

# MT Closed Profiles Connectors
## Brace Connectors - Outdoor

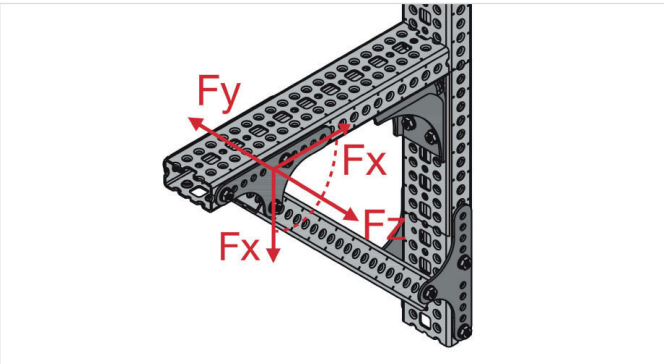


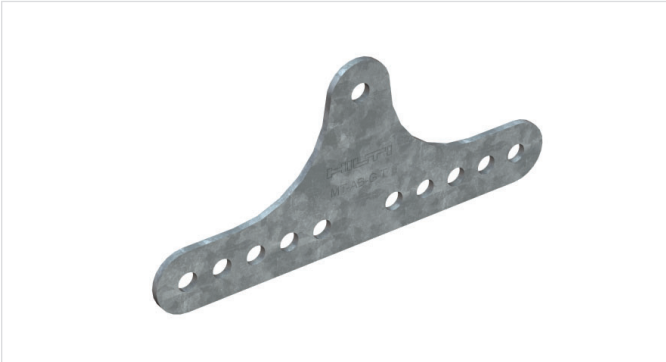

## Applications

- Creating a pivoting connection between two MT closed profiles
- Bracing metal framing and MEP support structures
- Suitable for use in moderately corrosive environments

## Advantages

- Part of the Hilti MT system – an economical, all-in-one solution for virtually all modular MEP support structures
- Adaptable – unlike welding, modular metal framing can be modified for future MEP requirements
- Extensive software support – PROFIS Modular Support Engineering, the MEP Support Selector, Revit® families, and plug-ins for Staad Pro® and Smart 3D® are all available to streamline design and ordering

## Technical data

| | |
|---|---|
| **Material composition** | Q355 or better steel |
| **Surface finish** | Hot-dip galvanized - for outdoor use |

### MT-AB-G T OC Angle Brace - Outdoor

| Order designation | Technical data | Sales pack Quantity | Item number | |
|---|---|---|---|---|
| **MT-AB-G T OC** | Outdoor, low to moderate pollution (C3 / C4 - low) | 4 pc | **2272116** | 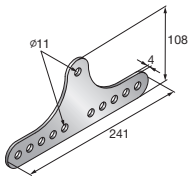 |



### Technical Data Angle Brace

| Item image | Load drawing | Order Designation | + Fz | - Fz | ± Fx | ± Fy |
|---|---|---|---|---|---|---|
|  | 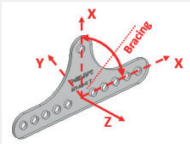 | **MT-AB-G T / MT-AB-G T OC** | 4,3 kN | 4,3 kN | 21,4 kN | - |



**Design note**

- Shown load values are recommended values with partial safety factors for actions and resistance included
- Design value = 1.5 * recommended value
- The design resistance of the products is defined in accordance with EN1993

# MT Closed Profiles Connectors

## Brace Connectors - Outdoor

### Operation Instruction

MT-AB-G T OC

2294697-06.2020

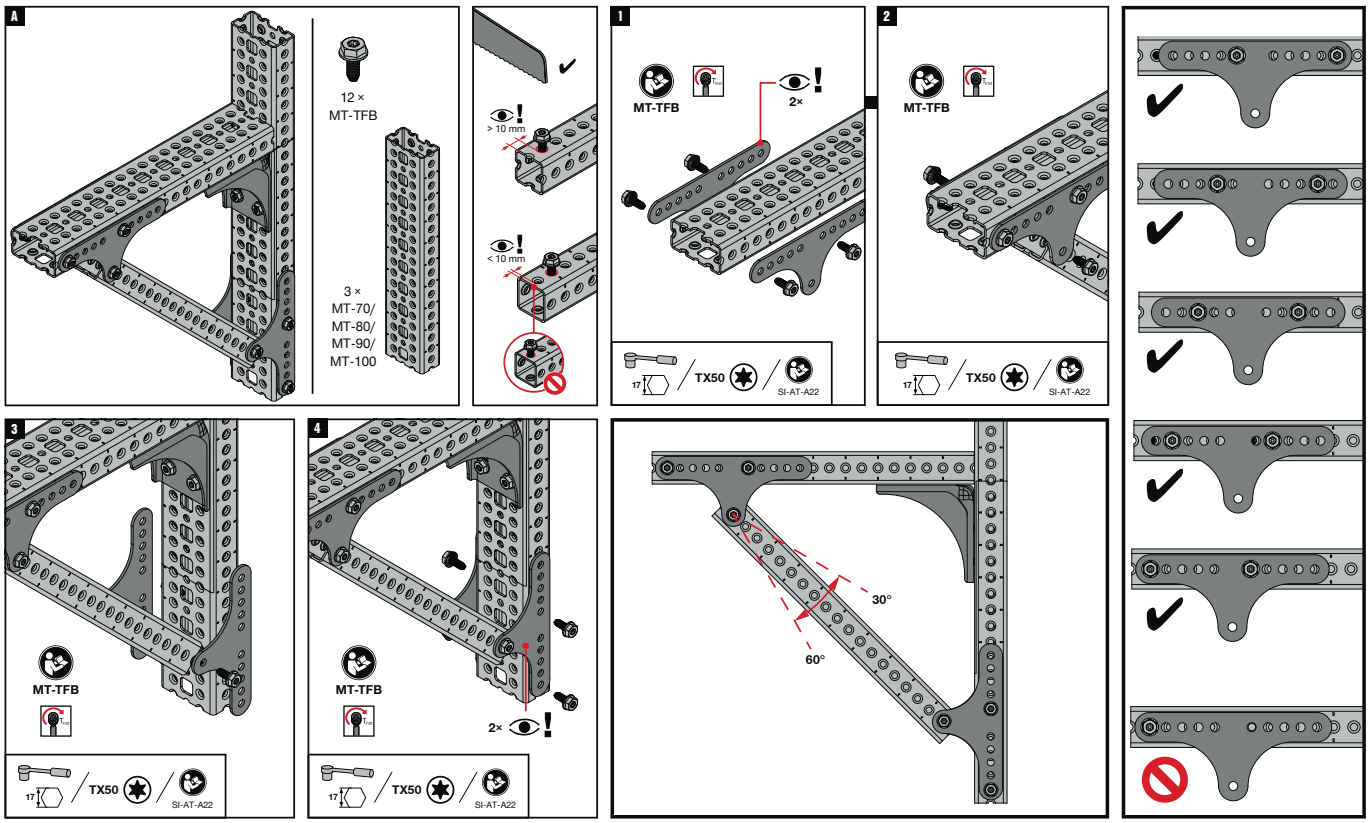


The latest IFU (Instruction For Use) is available on Hilti Online. Please check for any revisions before installing the product.

4

# MT Closed Profiles Connectors
## T-beam - Outdoor

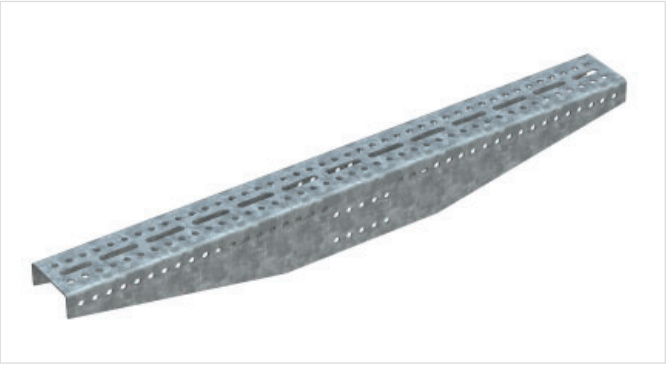

## Applications

- Constructing T-beams to support heavy-duty MEP installations by fastening to an upright MT-90 or MT-100 closed profile
- Suitable for use in moderately corrosive environments

## Advantages

- Part of the Hilti MT system – an economical, all-in-one solution for virtually all modular MEP support structures
- Easy to install – one-step assembly using Hilti MT-TFB thread-forming bolts
- Optimized load-to-weight ratio – engineered for maximum pipe ring/cable tray capacity with minimum self-weight

## Technical data

| | |
|---|---|
| **Material composition** | Q355 or better steel |
| **Surface finish** | Hot-dip galvanized - for outdoor use |

## MT-U-GL1 OC T-beam - Outdoor

| Order Designation | Technical data | Sales pack Quantity | Item number | |
|---|---|---|---|---|
| **MT-U-GL1 OC** | Outdoor, low to moderate pollution (C3 / C4 - low) | 2 pc | **2272070** | 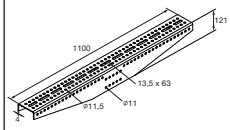  |

## Technical data T-beam

| Item image | Load drawing | Order Designation | + Fz | - Fz | ± Fx | ± Fy |
|---|---|---|---|---|---|---|
|  | 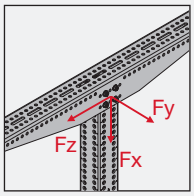  | **MT-U-GL1 OC** | 23,8 kN | 23,8 kN | 68,8 kN | 6,8 kN |

**Design note**

- Shown load values are recommended values with partial safety factors for actions and resistance include
- Design value = 1.5 * recommended value
- The design resistance of the products is defined in accordance with EN1993

# MT Closed Profiles Connectors

T-beam Outdoor

## Operation Instruction

MT-C-U-GL 1 OC

2312252-09.2020

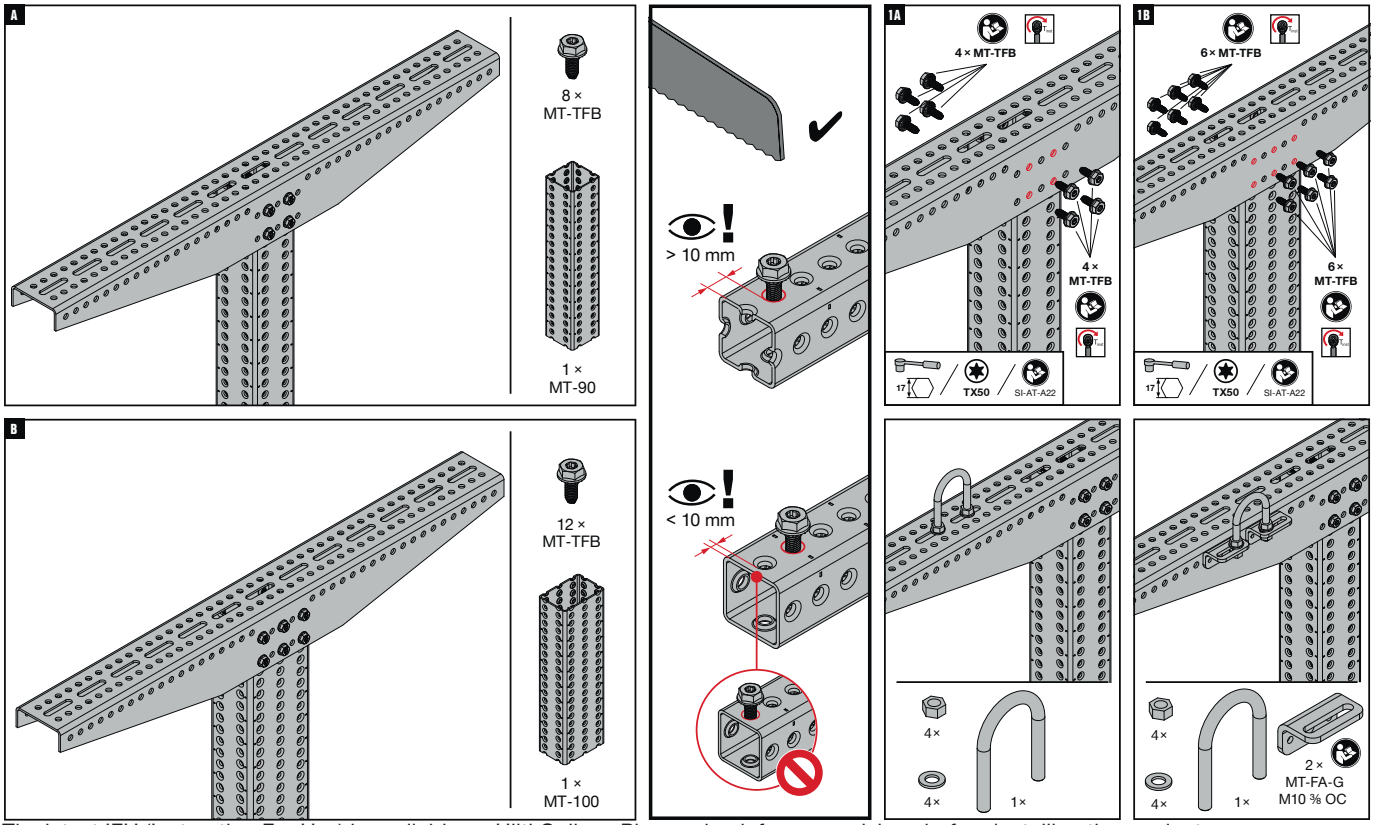


The latest IFU (Instruction For Use) is available on Hilti Online. Please check for any revisions before installing the product.

# MT Closed Profiles Connectors
## Threaded Rod Guide

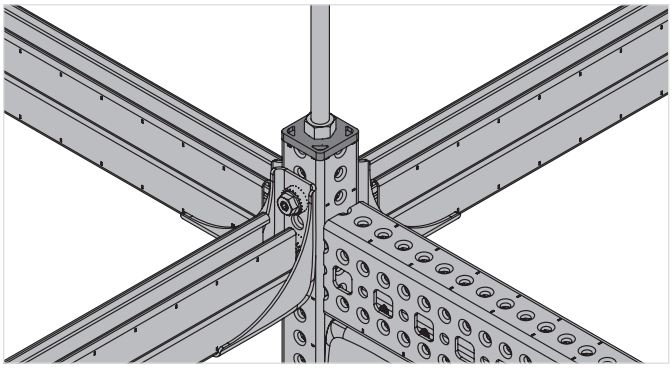

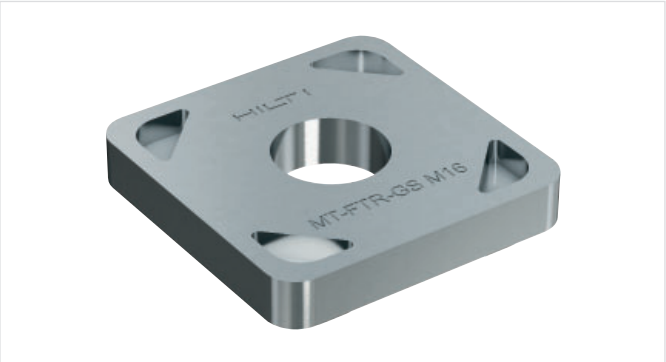


## Applications

- Closing the 2 ends of a MT-70 closed profile
- Building the core of overhead grids
- Suitable for use in dry, indoor environments

## Advantages

- Easy to install – adjustable, modular system
- Flexible – overhead grid system offers you high flexibility in terms of number and type of profiles to be used
- Extensive software support – PROFIS Modular Support Engineering, the MEP Support Selector, Revit® families, and plug-ins for Staad Pro® and Smart 3D® are all available to streamline design and ordering

## Technical data

| | |
|---|---|
| **Material composition** | Q235 or better steel |
| **Surface finish** | Indoor Coated - Electro galvanized |

## MT-FTR-GS M12 / M16 Threaded Rod Guide

| Order designation | Technical data | Sales pack Quantity | Item number | |
|---|---|---|---|---|
| **MT-FTR-GS M12** | Dry indoor conditions (C1) Indoor with temporary condensation (C2) | 15 pc | **2322417** | 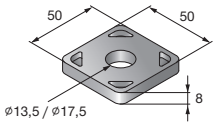  |
| **MT-FTR-GS M16** | | 15 pc | **2322418** | |

# MT Closed Profiles Connectors

## Thread Forming Bolt Distance Washer

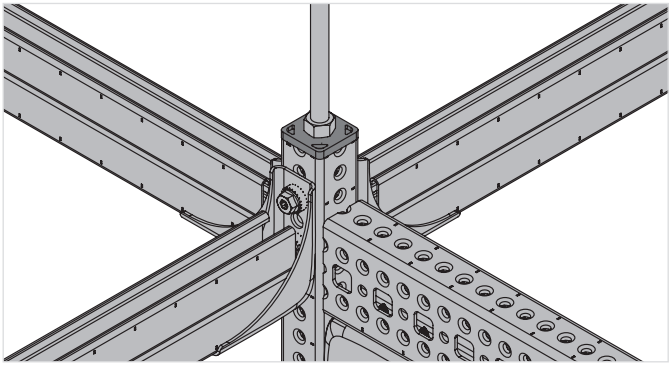

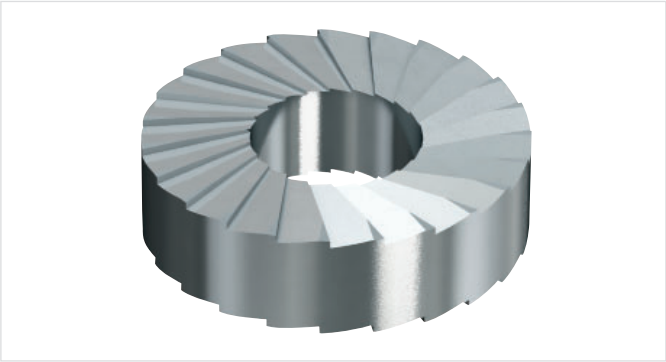

## Applications

- Assembling Hilti MT modular MEP support structures

## Advantages

- Part of the Hilti MT system – an economical, all-in-one solution for virtually all modular MEP support structures
- Serrated washer – better surface grip to resist loosening over time

## Technical data

| | |
|---|---|
| **Material composition** | Q355 or better steel |
| **Surface finish** | Indoor Coated - Electro galvanized |

## MT-FTR-GSW Washer

| Order designation | Technical data | Sales pack Quantity | Item number | |
|---|---|---|---|---|
| **MT-FTR-GSW** | Dry indoor conditions (C1) Indoor with temporary condensation (C2) | 20 pc | **2325248** | 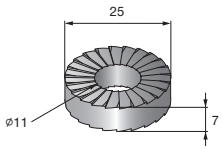  |

4

# MT Closed Profiles Connectors
## Threaded Rod Fixation - Outdoor

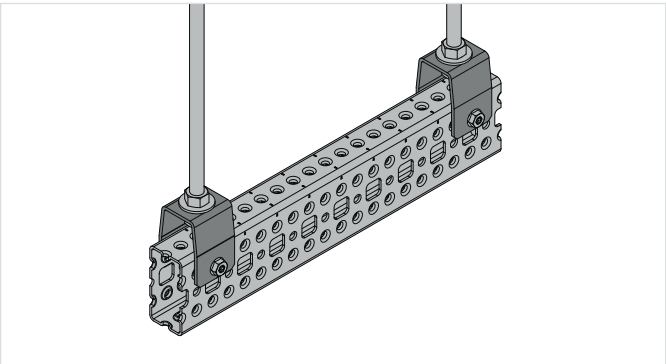

## Applications

- Hanger for suspending MT-70 and MT-80 closed profiles from threaded rod to create heavy-duty MEP and HVAC trapeze
- Assembling trapeze for MEP and HVAC installations subject to loads too heavy for strut trapeze

## Advantages

- Simpler inventory – these hangers make it possible to use standard MT closed profiles in more situations
- Corrosion resistance – hot-dip galvanized to help protect against moisture and chemical corrosion
- Compatible with MT Thread Forming Bolt channel connectors – for much faster, adaptable assembly

## Technical data

| | |
|---|---|
| **Material composition** | Q355 or better steel |
| **Surface finish** | Hot-dip galvanized - for outdoor use |

## MT-CTR-GS M12 / M16 OC Threaded Rod Fixation - Outdoor

| Order Designation | Technical data | Sales pack Quantity | Item number | |
|---|---|---|---|---|
| **MT-CTR-GS M12 OC** | Outdoor, low to moderate pollution (C3 / C4 - low) | 16 pc | **2332789** | 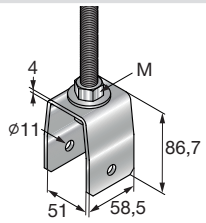  |
| **MT-CTR-GS M16 OC** | | 16 pc | **2332790** | |

# MT Closed Profiles Connectors
Threaded Rod Fixation - Outdoor

## MT-CTR-GL M12 / M16 OC Threaded Rod Fixation - Outdoor

| Order Designation | Technical data | Sales pack Quantity | Item number | |
|---|---|---|---|---|
| **MT-CTR-GL M12 OC** | Outdoor, low to moderate pollution (C3 / C4 - low) | 16 pc | **2332793** | 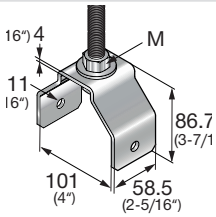  |
| **MT-CTR-GL M16 OC** | | 16 pc | **2332796** | |

4

# MT Closed Profiles Connectors
## Threaded Rod Guide, Threaded Rod Fixation

### **Technical data** Threaded rod guide

| Item image | Load drawing | Order Designation | + Fz | - Fz | ± Fx | ± Fy |
|---|---|---|---|---|---|---|
|  | 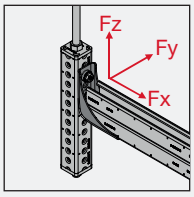 | **MT-FTR-GS + MT-40 D** | - | 2,0 kN | - | - |
|  | 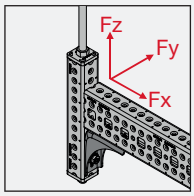 | **MT-FTR-GS + MT-80** | - | 5,0 kN | - | - |

**Design note**
- Shown load values are recommended values with partial safety factors for actions and resistance included
- Design value = 1.4 * recommended value
- The design resistance of the products is defined in accordance with EN1993

### **Technical data** Threaded rod fixation

| Item image | Load drawing | Order Designation | + Fz | - Fz | ± Fx | ± Fy |
|---|---|---|---|---|---|---|
|  | 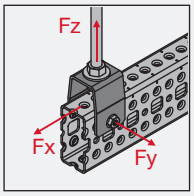 | **MT-CTR GS M12 OC** | - | 11,0 kN | - | - |
| | | **MT-CTR GS M16 OC** | - | 11,0 kN | - | - |
|  | 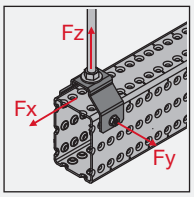 | **MT-CTR GL M12 OC** | - | 15,0 kN | - | - |
| | | **MT-CTR GL M16 OC** | - | 15,0 kN | - | - |

**Design note**
- Shown load values are recommended values with partial safety factors for actions and resistance included
- Design value = 1.5 * recommended value
- The design resistance of the products is defined in accordance with EN1993

# MT Closed Profiles Connectors
Threaded Rod Guide

## Operation Instruction
MT-FTR-GS M12/M16 / MT-FTR-GSW

2325320-04.2020

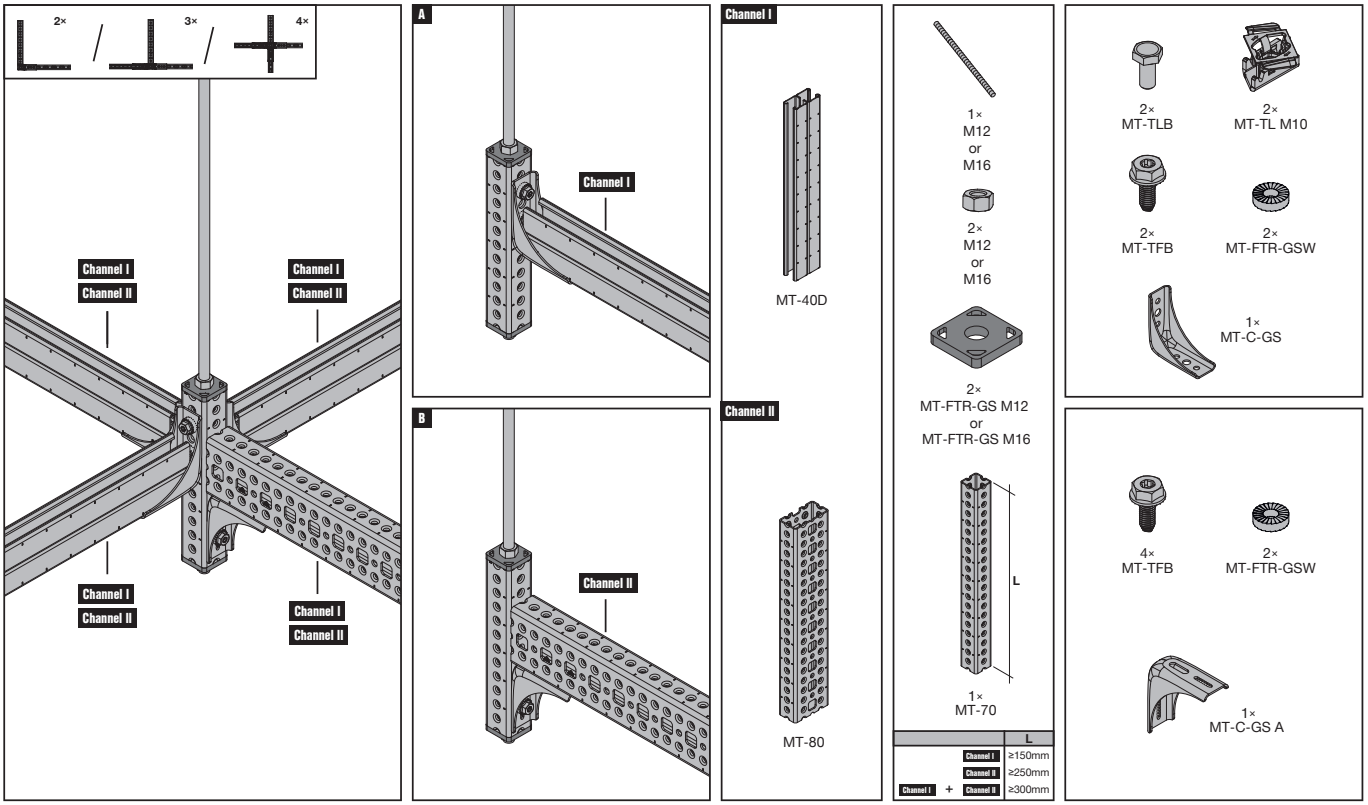


The latest IFU (Instruction For Use) is available on Hilti Online. Please check for any revisions before installing the product.

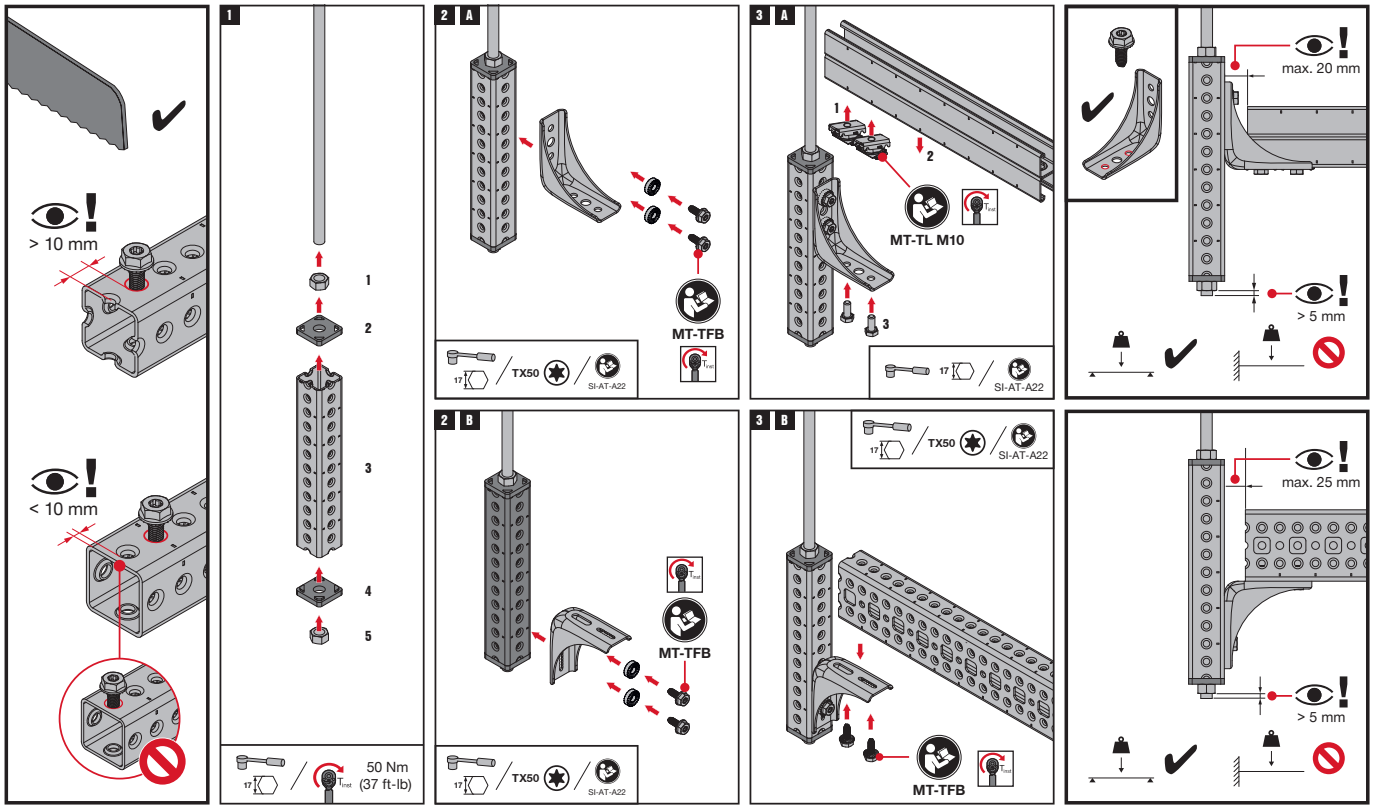


The latest IFU (Instruction For Use) is available on Hilti Online. Please check for any revisions before installing the product.

4

# MT Closed Profiles Connectors
Threaded Rod Fixation

## Operation Instruction
MT-CTR GS OC

2334574-07.2021

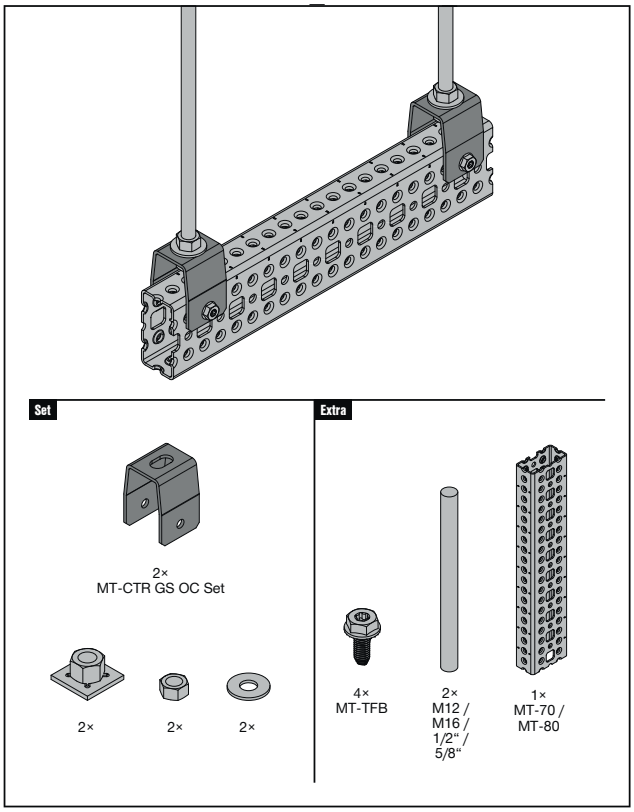


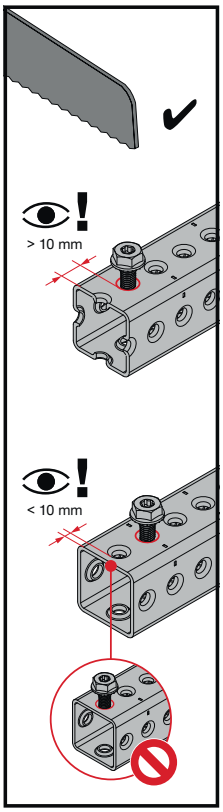


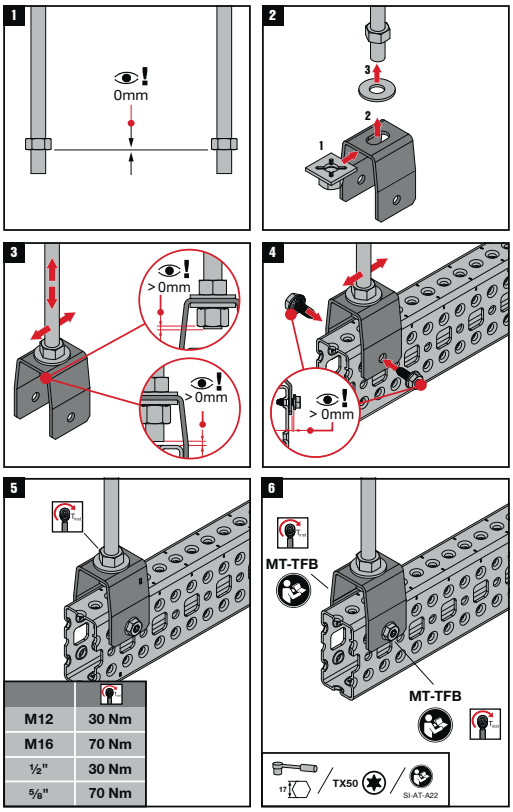


The latest IFU (Instruction For Use) is available on Hilti Online. Please check for any revisions before installing the product.

## MT-CTR GL OC

233483-07.2020

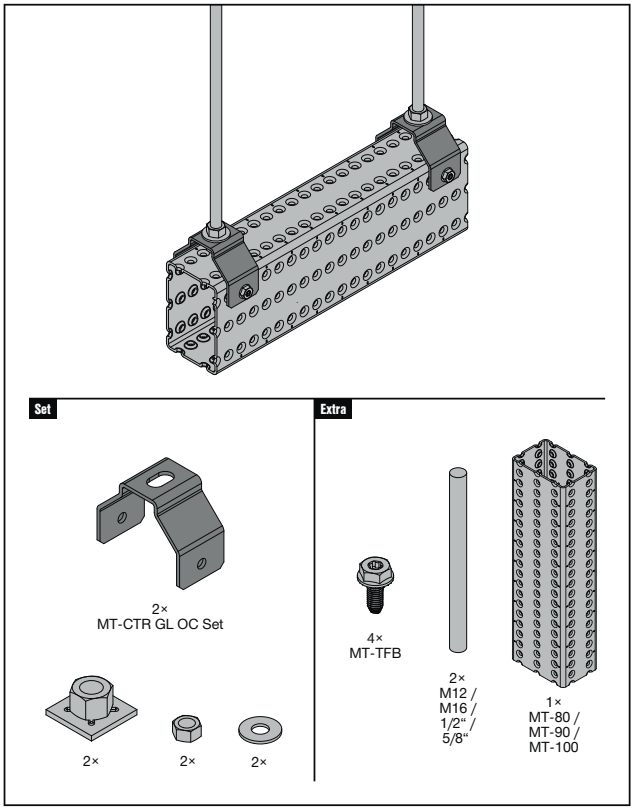


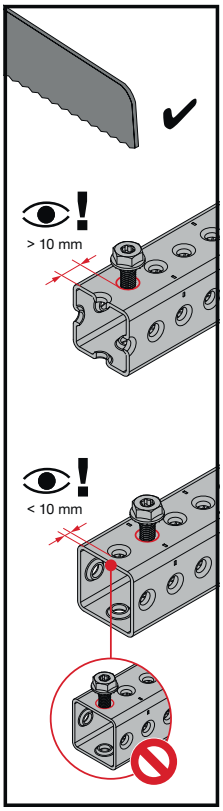


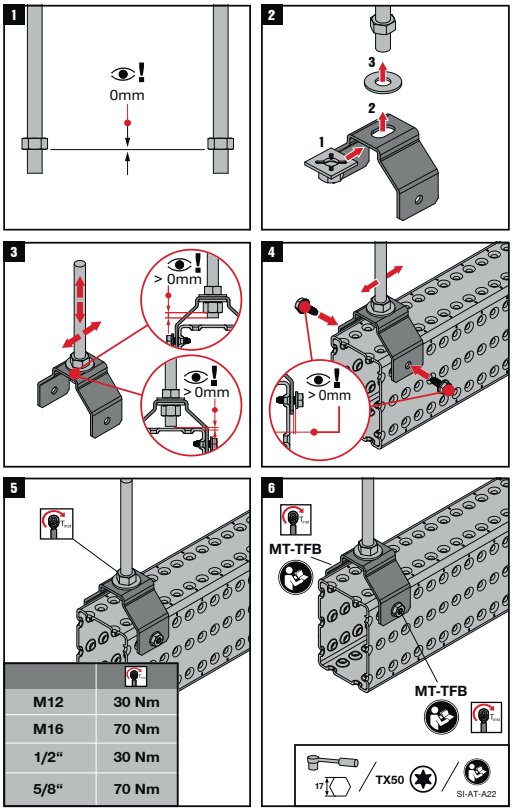


The latest IFU (Instruction For Use) is available on Hilti Online. Please check for any revisions before installing the product.

# MT Closed Profiles Connectors

## Pipe Stanchion - Outdoor

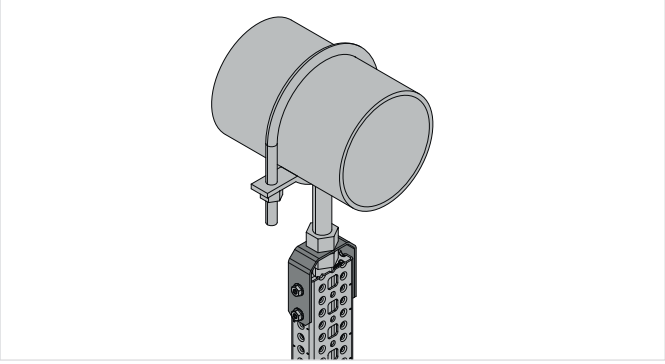

## Applications

- Fastening single pipe saddles to the top of a vertical closed profile
- Suitable for outdoor environments with low to moderate pollution (C3)

## Advantages

- Part of the Hilti MT system – an economical, all-in-one solution for virtually all modular MEP support structures
- Simpler installation – full vertical adjustability from the end of the vertical closed profile
- Easier to transport – lower weight compared to previous versions

## Technical data

| | |
|---|---|
| **Material composition** | Q355 or better steel |
| **Surface finish** | Hot-dip galvanized - for outdoor use |

## MT-C-PS 5/8 / 7/8 / 1-1/4 OC Pipe Stanchion - Outdoor

| Order Designation | Technical data | Sales pack Quantity | Item number | |
|---|---|---|---|---|
| **MT-C-PS 5/8 OC** | Outdoor, low to moderate pollution (C3 / C4 - low) | 10 pc | **2343196** | 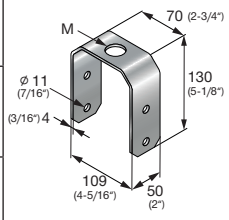  |
| **MT-C-PS 7/8 OC** | | 10 pc | **2343197** | |
| **MT-C-PS 1-1/4 OC** | | 10 pc | **2343198** | |

4

# MT Closed Profiles Connectors
## Pipe Stanchion - Outdoor

### **Technical data** Pipe Stanchion

| Item image | Load drawing | Order Designation | + Fz | - Fz | ± Fy |
|---|---|---|---|---|---|
|  | 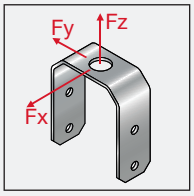  | **MT-C-PS 5/8 OC** | - | 5,6 kN | 1,5 kN |
| | | **MT-C-PS 7/8 1 OC** | - | 5,6 kN | 1,5 kN |
| | | **MT-C-PS 1-1/4 OC** | - | 5,6 kN | 1,5 kN |

**Design note**
- Shown load values are recommended values with partial safety factors for actions and resistance included
- Design value = 1.5 * recommended value
- The design resistance of the products is defined in accordance with EN1993

## Operation Instruction
MT-C-PS 5/8 OC / MT-C-PS 7/8 OC / MT-C-PS 1–1/4 OC

2347906-10.2021

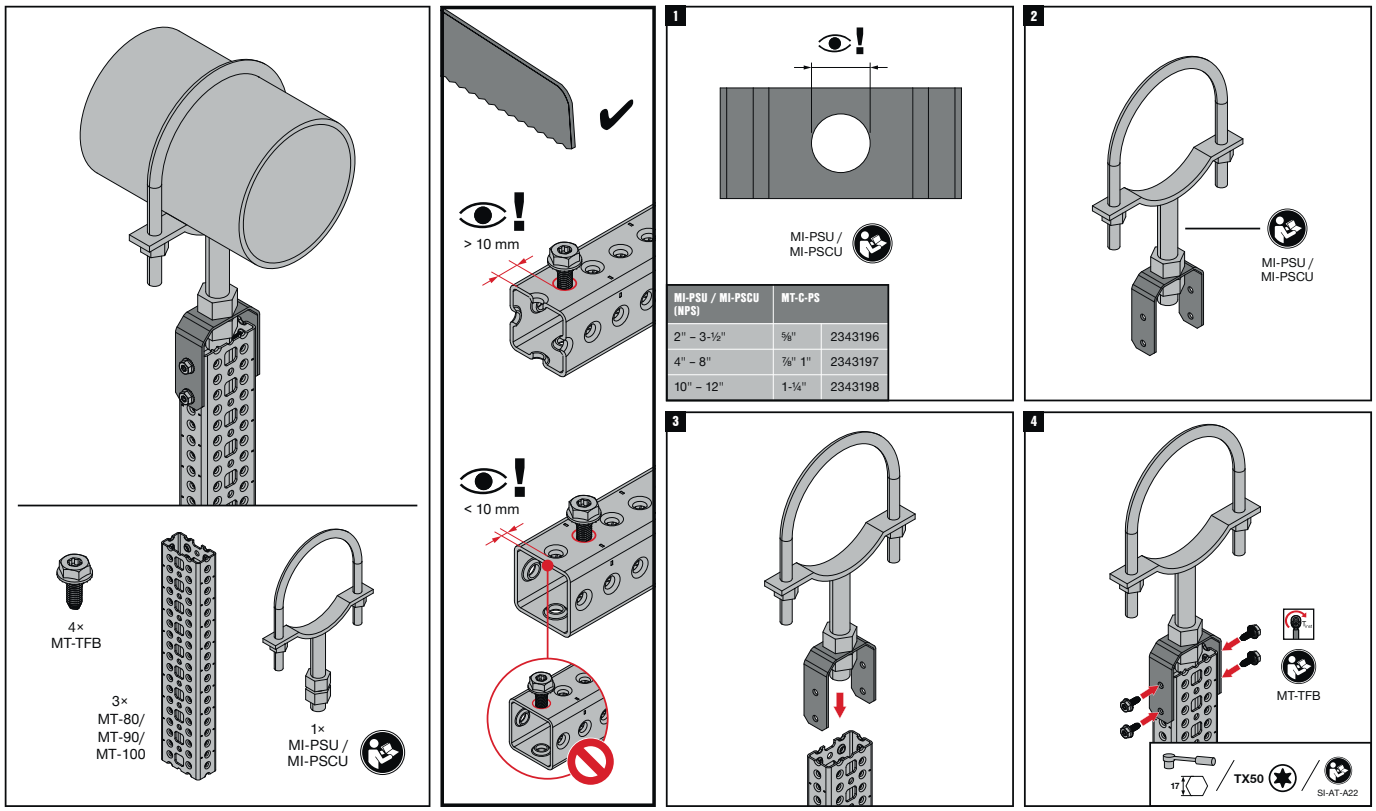


The latest IFU (Instruction For Use) is available on Hilti Online. Please check for any revisions before installing the product.

# MT Open C-channel (Strut) Base Material Connectors

90° Connectors

## Applications

- Fastening MT strut channel to concrete floors, walls or ceilings
- Fastening MT strut channel to structural steel
- Anchoring metal framing and MEP support structures with extra-light loads to a base material

## Advantages

- Part of the Hilti MT system – an economical, all-in-one solution for virtually all modular MEP support structures
- Easy to install – compatible with the Hilti MT Twist-Lock, a faster alternative to spring nuts for assembling a modular support system
- Adjustable – slotted anchor hole to simplify baseplate positioning and fastening

## Technical data

| | |
|---|---|
| **Material composition** | Q235 or better steel |
| **Surface finish** | Pre-galvanized - for dry indoor use only |

## MT-B-L Base Material Connector 1-hole

| Order Designation | Technical Data | Sales pack quantity | Item number | |
|---|---|---|---|---|
| **MT-B-L** | Dry indoor conditions (C1) Indoor with temporary condensation (C2) | 20 pc | **2272086** | 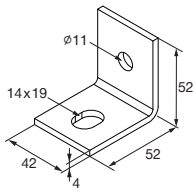  |

## MT-B-T Base Material Connector 2-hole

| Order Designation | Technical Data | Sales pack quantity | Item number | |
|---|---|---|---|---|
| **MT-B-T** | Dry indoor conditions (C1) Indoor with temporary condensation (C2) | 20 pc | **2272090** | 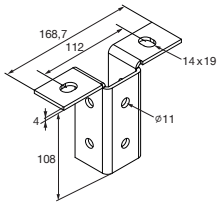  |

5

# MT Open C-channel (Strut) Base Material Connectors

90° Connectors

## MT-B-O2 Base Material Connector - 2 hole

| Order Designation | Length | Thickness | Weight | Technical data | Sals pack quantity | Item number | |
|---|---|---|---|---|---|---|---|
| **MT-B-O2** | 185 mm | 4 mm | 1027 g | Dry indoor conditions (C1) Indoor with temporary condensation (C2) | 12 pc | **2272094** | 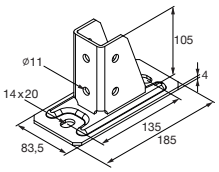  |

## MT-B-O2B Base Material Connector - 2 hole

| Order Designation | Length | Thickness | Weight | Technical data | Sals pack quantity | Item number | |
|---|---|---|---|---|---|---|---|
| **MT-B-O2B** | 200 mm | 8 mm | 2072 g | Dry indoor conditions (C1) Indoor with temporary condensation (C2) | 6 pc | **2282212** | 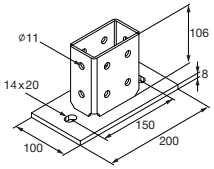  |

## MT-B-O4 Base Material Connector - 4 hole

| Order Designation | Length | Thickness | Weight | Technical data | Sals pack quantity | Item number | |
|---|---|---|---|---|---|---|---|
| **MT-B-O4** | 200 mm | 8 mm | 3315 g | Dry indoor conditions (C1) Indoor with temporary condensation (C2) | 4 pc | **2272098** | 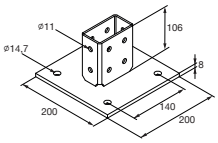  |

# MT Open C-channel (Strut) Base Material Connectors

90° Connectors - Outdoor

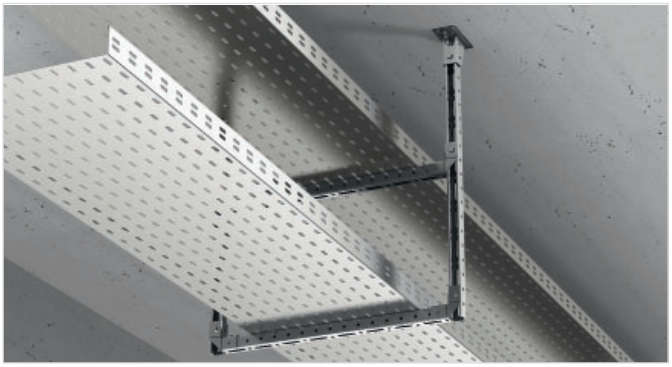

## Applications

- Fastening MT strut channel to concrete floors, walls or ceilings
- Fastening MT strut channel to structural steel
- Anchoring metal framing and MEP support structures with extra-light loads to a base material

## Advantages

- Part of the Hilti MT system – an economical, all-in-one solution for virtually all modular MEP support structures
- Easy to install – compatible with the Hilti MT Twist-Lock, a faster alternative to spring nuts for assembling a modular support system
- Adjustable – slotted anchor hole to simplify baseplate positioning and fastening

## Technical data

| | |
|---|---|
| **Material composition** | Q235 or better steel |
| **Surface finish** | Hot-dip galvanized - for outdoor use |

### MT-B-L OC Base Material Connector - 1-hole - Outdoor

| Order Designation | Length | Thickness | Weight | Technical data | Sals pack quantity | Item number | |
|---|---|---|---|---|---|---|---|
| **MT-B-L OC** | 52 mm | 4 mm | 119 g | Outdoor, low to moderate pollution (C3 / C4 - low) | 20 pc | **2272088** | 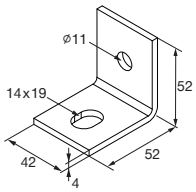  |

### MT-B-T OC Base Material Connector - 2-hole - Outdoor

| Order Designation | Length | Thickness | Weight | Technical data | Sals pack quantity | Item number | |
|---|---|---|---|---|---|---|---|
| **MT-B-T OC** | 112 mm | 2 mm | 569 g | Outdoor, low to moderate pollution (C3 / C4 - low) | 20 pc | **2272092** | 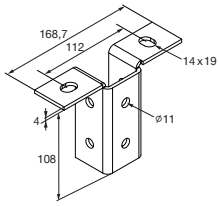  |

5

# MT Open C-channel (Strut) Base Material Connectors

90° Connectors - Outdoor

## MT-B-O2 OC Base Material Connector - 2-hole - Outdoor

| Order Designation | Length | Thickness | Weight | Technical data | Sals pack quantity | Item number | |
|---|---|---|---|---|---|---|---|
| **MT-B-O2 OC** | 185 mm | 4 mm | 1031 g | Outdoor, low to moderate pollution (C3 / C4 - low) | 12 pc | **2272096** | 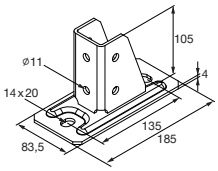  |

## MT-B-O2B OC Base Material Connector - 2-hole - Outdoor

| Order Designation | Length | Thickness | Weight | Technical data | Sals pack quantity | Item number | |
|---|---|---|---|---|---|---|---|
| **MT-B-O2B OC** | 200 mm | 8 mm | 2072 g | Outdoor, low to moderate pollution (C3 / C4 - low) | 6 pc | **2282213** | 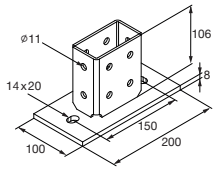  |

## MT-B-O4 OC Base Material Connector - 4-hole - Outdoor

| Order Designation | Length | Thickness | Weight | Technical data | Sals pack quantity | Item number | |
|---|---|---|---|---|---|---|---|
| **MT-B-O4 OC** | 200 mm | 8 mm | 3315 g | Outdoor, low to moderate pollution (C3 / C4 - low) | 4 pc | **2272099** | 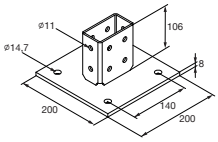  |

# MT Open C-channel (Strut) Base Material Connectors
90° Connectors

## **Technical data** Base Material Connectors

| Item image | Load drawing | Order Designation | + Fz | - Fz | ± Fx | ± Fy |
|---|---|---|---|---|---|---|
|  | 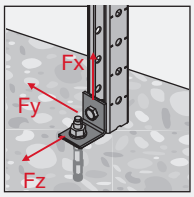  | **MT-B-L / MT-B-L OC** | 5,0 kN | 2,1 kN | 2,1 kN | 0,0 kN |
|  | 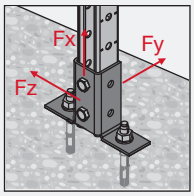  | **MT-B-T / MT-B-T OC** | 0,6 kN | 0,6 kN | 6,0 kN | 1,2 kN |
|  | 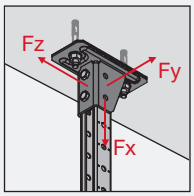  | **MT-B-O2 / MT-B-O2 OC** | 5,2 kN | 5,2 kN | 9,0 kN | 1,7 kN |
| 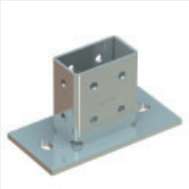 | 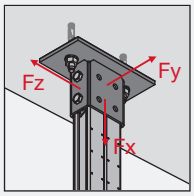  | **MT-B-O2B / MT-B-O2B OC** | 19,2 kN | 19,2 kN | 12,6 kN | 3,6 kN |
|  | 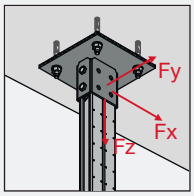  | **MT-B-O4B / MT-B-O4B OC** | 19,2 kN | 19,2 kN | 12,6 kN | 3,6 kN |

**Design note**
- Shown load values are recommended values with partial safety factors for actions and resistance included
- Design value = 1.4 * recommended value
- The design resistance of the products is defined in accordance with EN1993

5

# MT Open C-channel (Strut) Base Material Connectors

90° Connectors

## Operation Instruction

MT-B-L / MT-B-L OC

2288351-04.2020

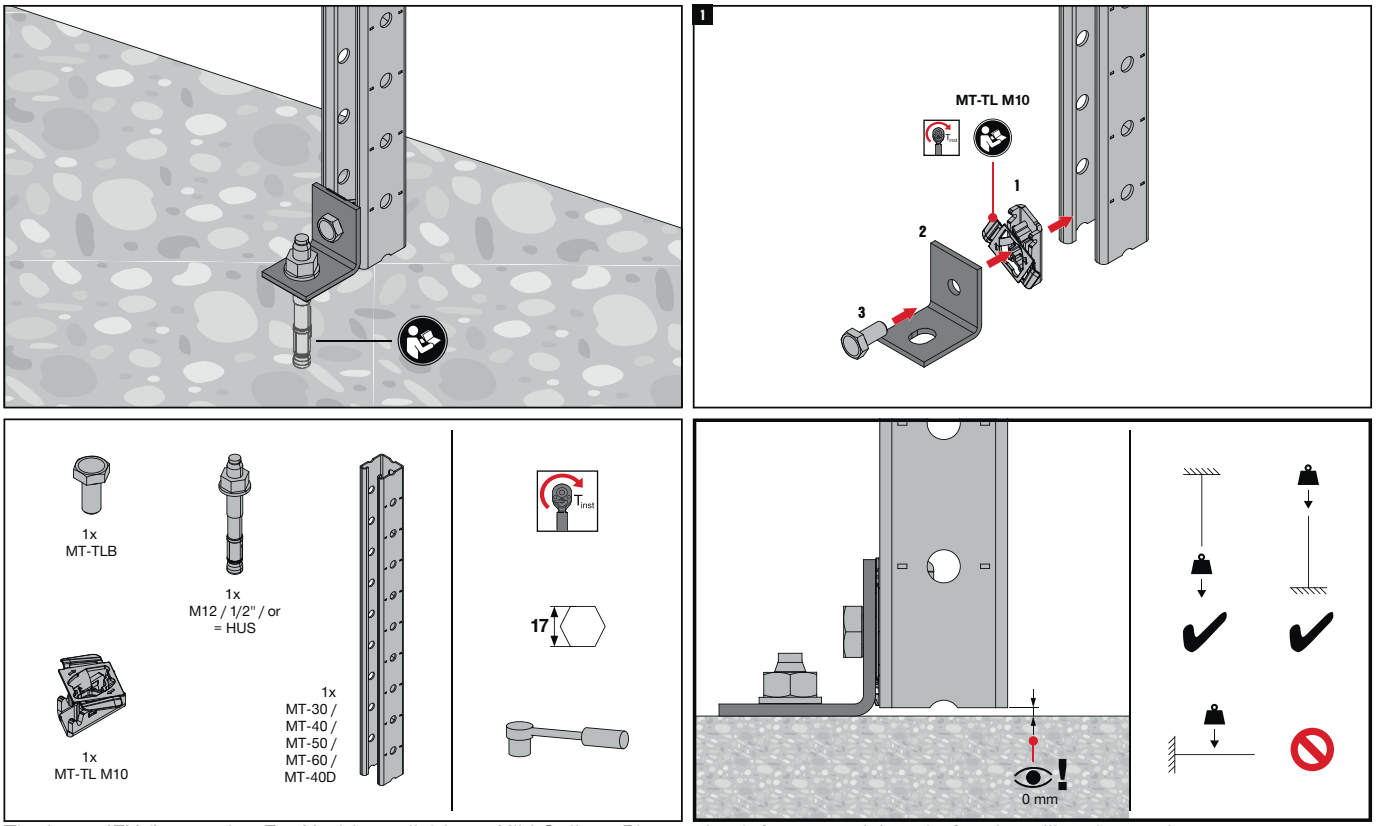


The latest IFU (Instruction For Use) is available on Hilti Online. Please check for any revisions before installing the product.

MT-B-T / MT-B-T OC

2288352-06.2020

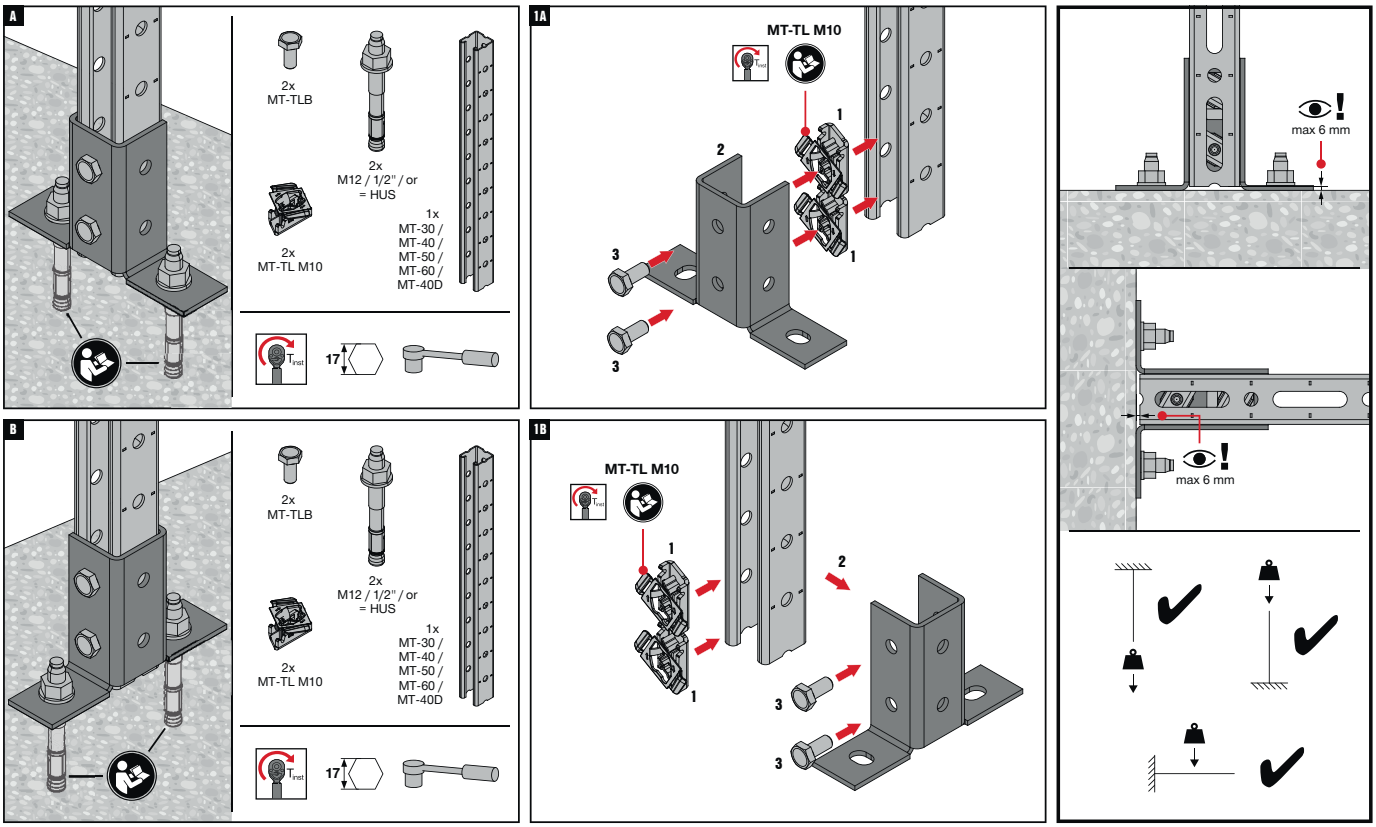


The latest IFU (Instruction For Use) is available on Hilti Online. Please check for any revisions before installing the product.

# MT Open C-channel (Strut) Base Material Connectors

90° Connectors

## Operation Instruction

MT-B-02 / MT-B-02 OC

2288353-09.2020

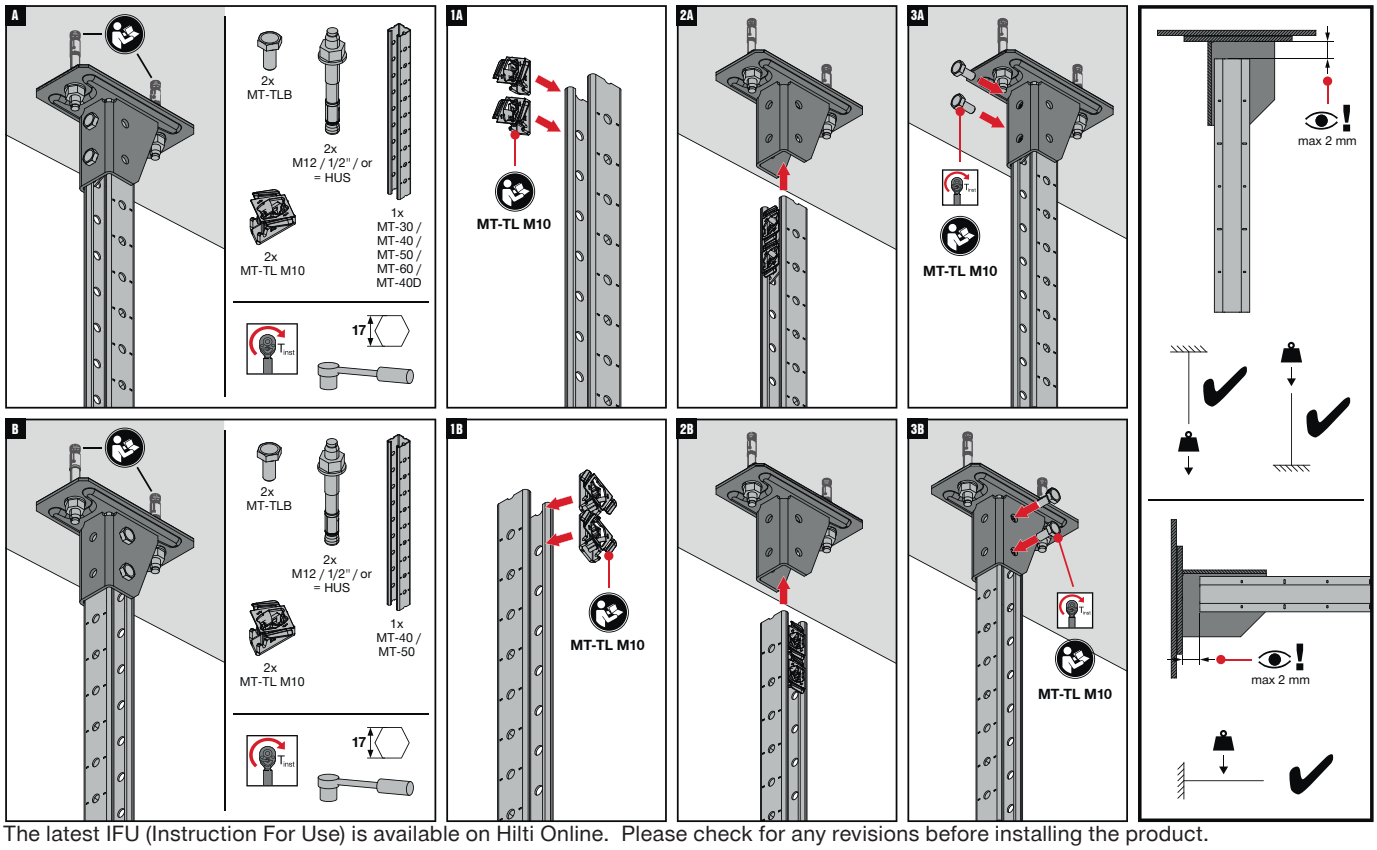


The latest IFU (Instruction For Use) is available on Hilti Online. Please check for any revisions before installing the product.

MT-B-02B / MT-B-02B OC

2288354-09.2020

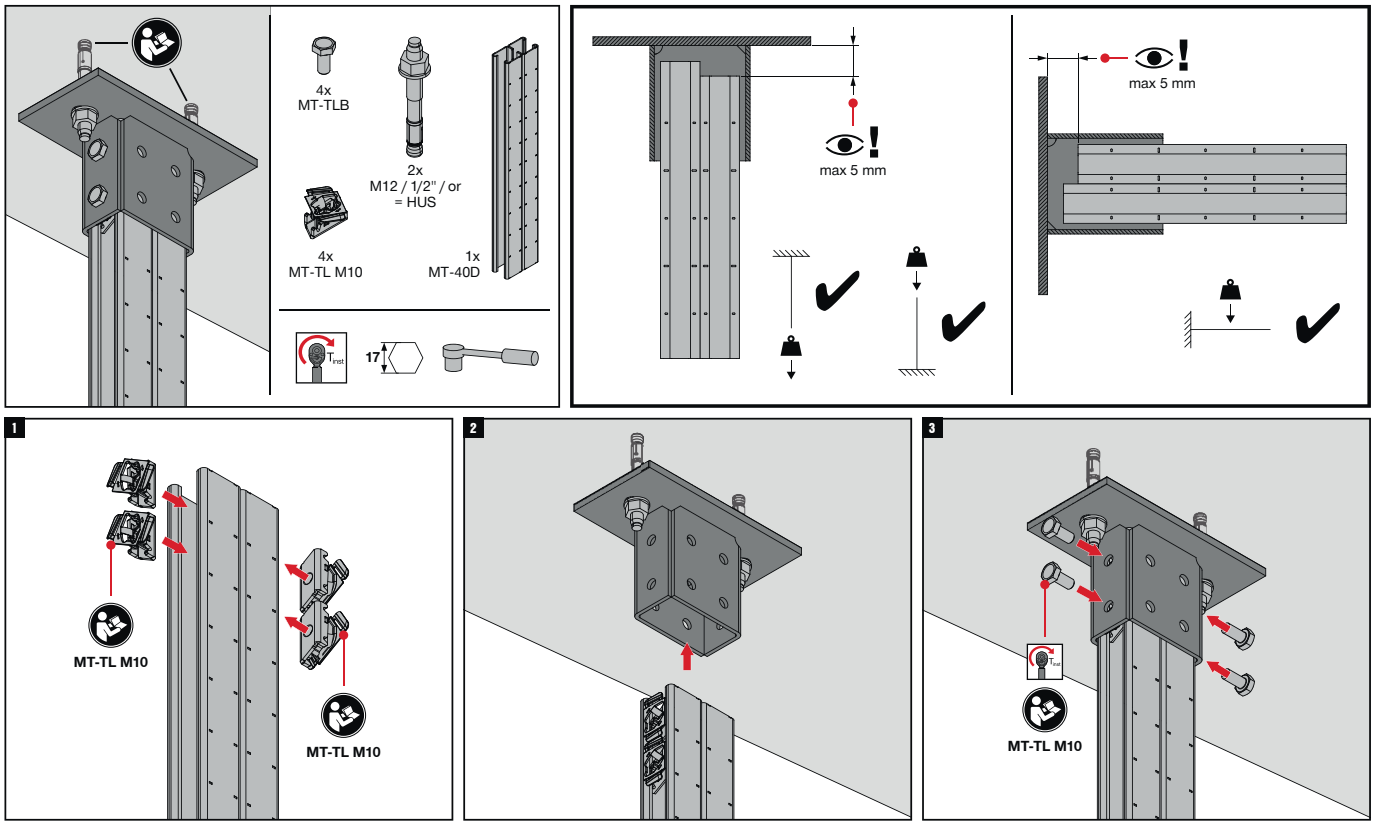


The latest IFU (Instruction For Use) is available on Hilti Online. Please check for any revisions before installing the product.

5

# MT Open C-channel (Strut) Base Material Connectors

90° Connectors

## Operation Instruction

MT-B-04 / MT-B-04 OC

2288355-09.2020

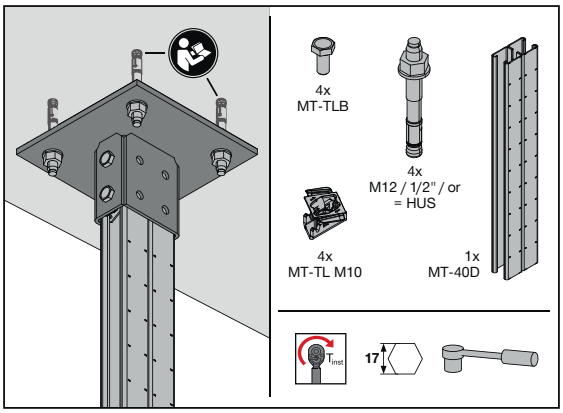


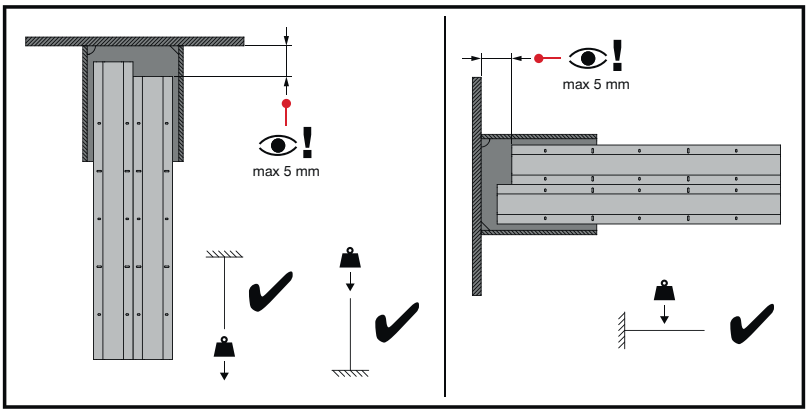


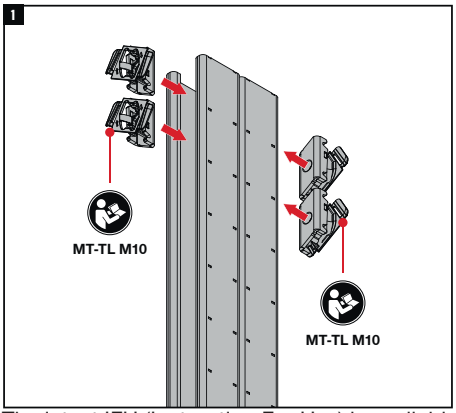


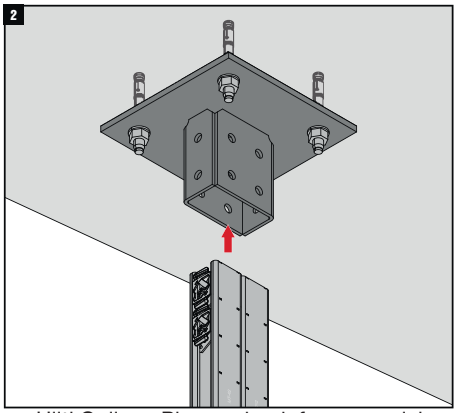


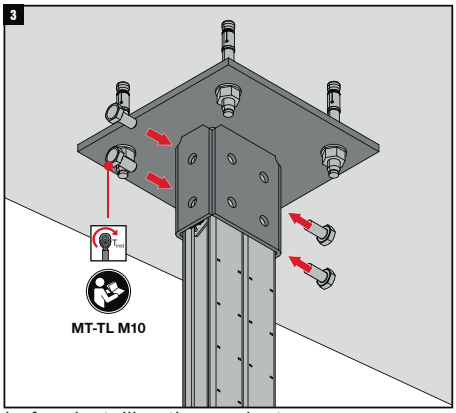


The latest IFU (Instruction For Use) is available on Hilti Online. Please check for any revisions before installing the product.

# MT Open C-channel (Strut) Base Material Connectors
Angle Brace

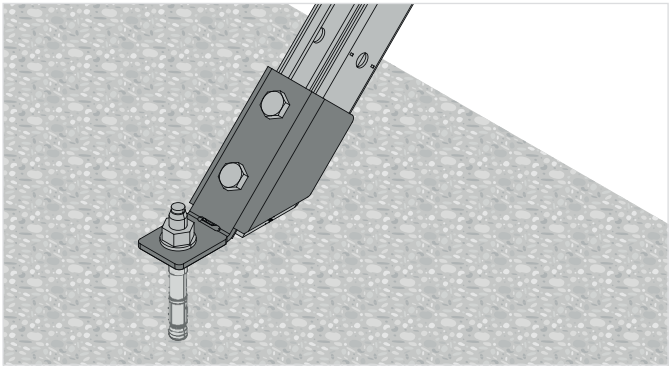

## Applications

- Anchoring MT-40 or MT-50 strut channels to concrete at a 45-degree angle for use as lateral bracing
- Lateral bracing of lightweight metal framing and MEP support structures
- Suitable for use in dry, indoor environments

## Advantages

- Part of the Hilti MT system – an economical, all-in-one solution for virtually all modular MEP support structures
- Easy to install – compatible with the Hilti MT Twist-Lock, a faster alternative to spring nuts for assembling a modular support system
- Part of a complete Hilti solution – compatible with our direct fastening and anchoring solutions

## Technical data

| | |
|---|---|
| **Material composition** | Q235 or better steel |
| **Surface finish** | Pre-galvanized - for dry indoor use only |

## MT-AB-L 45 Angle Brace

| Order Designation | Thickness | Weight | Technical data | Sales pack quantity | Item number | |
|---|---|---|---|---|---|---|
| **MT-AB-L 45** | 4 mm | 427 g | Dry indoor conditions (C1) Indoor with temporary condensation (C2) | 10 pc | **2272113** | 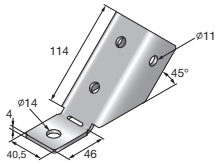  |

## MT-AB-LL2 45 Angle Brace

| Order Designation | Thickness | Weight | Technical data | Sales pack quantity | Item number | |
|---|---|---|---|---|---|---|
| **MT-AB-LL2 45** | 4 mm | 553 g | Dry indoor conditions (C1) Indoor with temporary condensation (C2) | 10 pc | **2272115** | 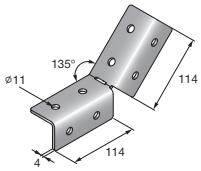  |

## MT-AB set Angle Brace adjustable

| Order Designation | Thickness | Weight | Technical data | Sales pack quantity | Item number | |
|---|---|---|---|---|---|---|
| **MT-AB A set** | 4 mm | 441 g | Dry indoor conditions (C1) Indoor with temporary condensation (C2) | 12 pc | **2346395** | 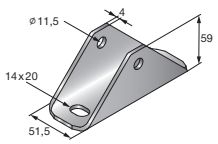  |

5

# MT Open C-channel (Strut) Base Material Connectors

## Channel Clamp

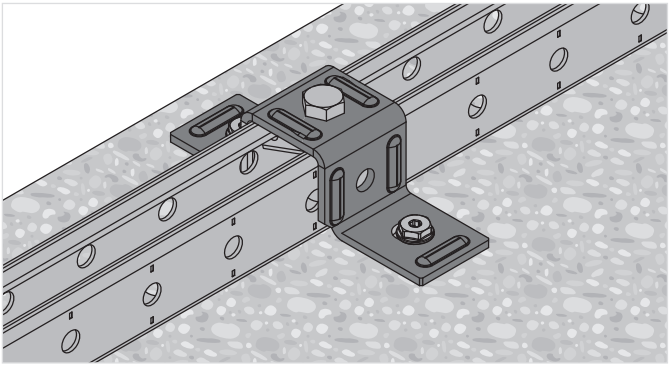

### Applications

- Cross-connection of one strut channel to concrete
- Suitable for use in dry, indoor environments

### Advantages

- Compatible with MT Twist-Lock and MT Thread Forming Bolt channel connectors – for much faster, adaptable assembly
- Universal – complete many different applications using few parts
- Twist-lock and Thread Forming Bolt channel connector takes up shear and tensile loads

### Technical data

| | |
|---|---|
| **Material composition** | Q235 or better steel |
| **Surface finish** | Indoor Coated - Electro galvanized |

### MT-CC-BC 40/50 Base Material Connector - Channel Clamp

| Order Designation | Thickness | Weight | Technical data | Sales pack quantity | Item number | |
|---|---|---|---|---|---|---|
| **MT-CC-BC 40/50** | 4 mm | 326 g | Dry indoor conditions (C1) Indoor with temporary condensation (C2) | 20 pc | **2322432** | 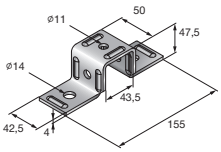  |

### MT-CC-BS 40/50 Base Material Connector - Channel Clamp

| Order Designation | Thickness | Weight | Technical data | Sales pack quantity | Item number | |
|---|---|---|---|---|---|---|
| **MT-CC-BS 40/50** | 4 mm | 326 g | Dry indoor conditions (C1) Indoor with temporary condensation (C2) | 20 pc | **2322402** | 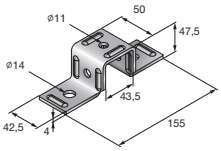  |

# MT Open C-channel (Strut) Base Material Connectors

Angle Brace - Outdoor

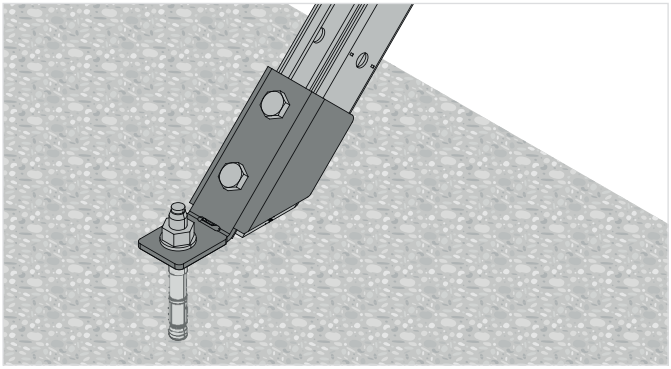

## Applications

- Anchoring MT-40 or MT-50 strut channels to concrete at a 45-degree angle for use as lateral bracing
- Lateral bracing of lightweight metal framing and MEP support structures
- Suitable for use in moderately corrosive environments

## Advantages

- Part of the Hilti MT system – an economical, all-in-one solution for virtually all modular MEP support structures
- Easy to install – compatible with the Hilti MT Twist-Lock, a faster alternative to spring nuts for assembling a modular support system
- Part of a complete Hilti solution – compatible with our direct fastening and anchoring solutions

## Technical data

| | |
|---|---|
| **Material composition** | Q235 or better steel |
| **Surface finish** | Outdoor Coated - HDG |

## MT-AB-L 45 OC Angle Brace - Outdoor

| Order Designation | Thickness | Weight | Technical data | Sales pack quantity | Item number | |
|---|---|---|---|---|---|---|
| **MT-AB-L 45 OC** | 4 mm | 427 g | Outdoor, low to moderate pollution (C3 / C4 - low) | 10 pc | **2272114** | 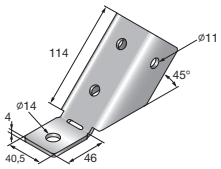  |

## MT-AB-LL2 45 OC Angle Brace - Outdoor

| Order Designation | Thickness | Weight | Technical data | Sales pack quantity | Item number | |
|---|---|---|---|---|---|---|
| **MT-AB-LL2 45 OC** | 4 mm | 553 g | Outdoor, low to moderate pollution (C3 / C4 - low) | 10 pc | **2273585** | 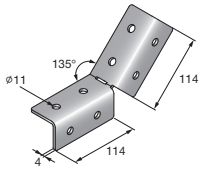  |

## MT-AB A OC Angle Brace Adjustable - Outdoor

| Order Designation | Thickness | Weight | Technical data | Sales pack quantity | Item number | |
|---|---|---|---|---|---|---|
| **MT-AB A OC set** | 4 mm | 44 g | Outdoor, low to moderate pollution (C3 / C4 - low) | 12 pc | **2346396** | 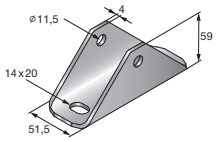  |

5

# MT Open C-channel (Strut) Base Material Connectors

## Channel Clamp - Outdoor

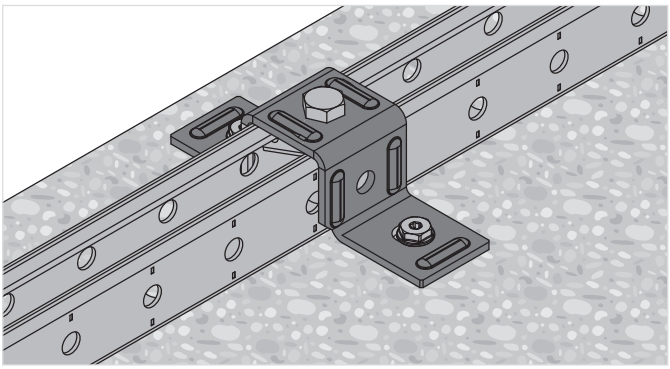

## Applications

- Cross-connection of one strut girder to another channel or girder
- Suitable for use in moderately corrosive environments

## Technical data

| | |
|---|---|
| **Material composition** | Q235 or better steel |
| **Surface finish** | Outdoor Coated - HDG |

## Advantages

- Compatible with MT Twist-Lock and MT Thread Forming Bolt channel connectors – for much faster, adaptable assembly
- Universal – complete many different applications using few parts
- Twist-lock and Thread Forming Bolt channel connector takes up shear and tensile loads

### MT-CC-BC 40/50 OC Base Material Connector - Channel Clamp - Outdoor

| Order Designation | Thickness | Weight | Technical data | Sales pack quantity | Item number | |
|---|---|---|---|---|---|---|
| **MT-CC-BC 40/50 OC** | 4 mm | 326 g | Outdoor, low to moderate pollution (C3 / C4 - low) | 20 pc | **2322401** | 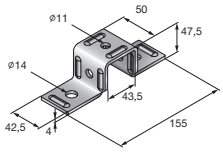  |

### MT-CC-BS 40/50 OC Base Material Connector - Channel Clamp - Outdoor

| Order Designation | Thickness | Weight | Technical data | Sales pack quantity | Item number | |
|---|---|---|---|---|---|---|
| **MT-CC-BS 40/50 OC** | 4 mm | 326 g | Outdoor, low to moderate pollution (C3 / C4 - low) | 20 pc | **2322403** | 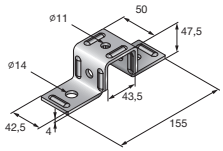  |

# MT Open C-channel (Strut) Base Material Connectors

Channel Clamp - Outdoor

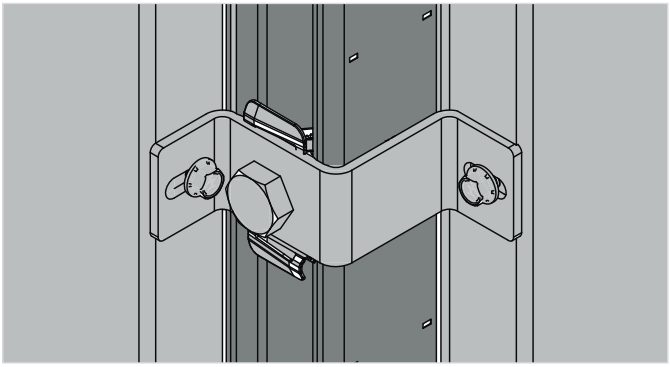

## Applications

- Attaching polypanels to a substructure of MT strut/closed profile
- Hot/cold aisle containment in data centers

## Advantages

- Helps lower installation cost – this new solution uses fewer and simpler components than previous Hilti panel connectors, saving you upfront costs and time on-site
- Compatible with MT Thread Forming Bolt channel connectors – for much faster, adaptable assembly with higher pull-out and shear resistance
- Corrosion resistance – hot-dip galvanized to help protect against moisture and chemical corrosion

## Technical data

| | |
|---|---|
| **Material composition** | Q235 or better steel |
| **Surface finish** | Outdoor Coated - HDG |

## MT-CC-40/50 C OC Channel Clamp - Outdoor

| Order Designation | Height | Technical data | Sales pack quantity | Item number | |
|---|---|---|---|---|---|
| **MT-CC-40/50 C OC** | 3 mm | Outdoor, low to moderate pollution (C3 / C4 - low) | 8 pc | **2353779** | 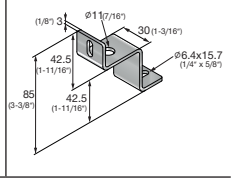  |

## MT-CC-40/50 M OC Channel Clamp - Outdoor

| Order Designation | Height | Technical data | Sales pack quantity | Item number | |
|---|---|---|---|---|---|
| **MT-CC-40/50 M OC** | 3 mm | Outdoor, low to moderate pollution (C3 / C4 - low) | 16 pc | **2353800** | 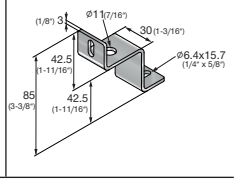  |

5

# MT Open C-channel (Strut) Base Material Connectors
Angle Brace, Channel Clamp

## **Technical data** Angle Brace

| Item image | Load drawing | Order Designation | + Fz | - Fz | ± Fx | ± Fy |
|---|---|---|---|---|---|---|
|  | 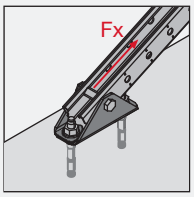 | **MT-AB A / MT-AB A OC** | - | - | 9,9 kN | - |
|  | 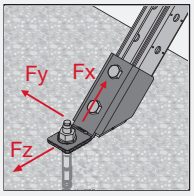 | **MT-AB-L 45 / MT-AB-L 45 OC** | - | - | 3,8 kN | - |

**Design note**
- Shown load values are recommended values with partial safety factors for actions and resistance included
- Design value = 1.4 * recommended value
- The design resistance of the products is defined in accordance with EN1993

## **Technical data** Channel Clamp

| Item image | Load drawing | Order Designation | + Fz | - Fz | ± Fx | ± Fy |
|---|---|---|---|---|---|---|
|  | 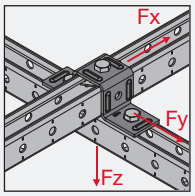 | **MT-CC-40/50 / MT-CC-40/50 OC** | - | 5,4 kN | 2,5 kN | 5,7 kN |

**Design note**
- Shown load values are recommended values with partial safety factors for actions and resistance included
- Design value = 1.4 * recommended value
- The design resistance of the products is defined in accordance with EN1993

# MT Open C-channel (Strut) Base Material Connectors

Angle Brace

## Operation Instruction

MT-AB-L 45 / MT-AB-L 45 OC

2294695-07.2020

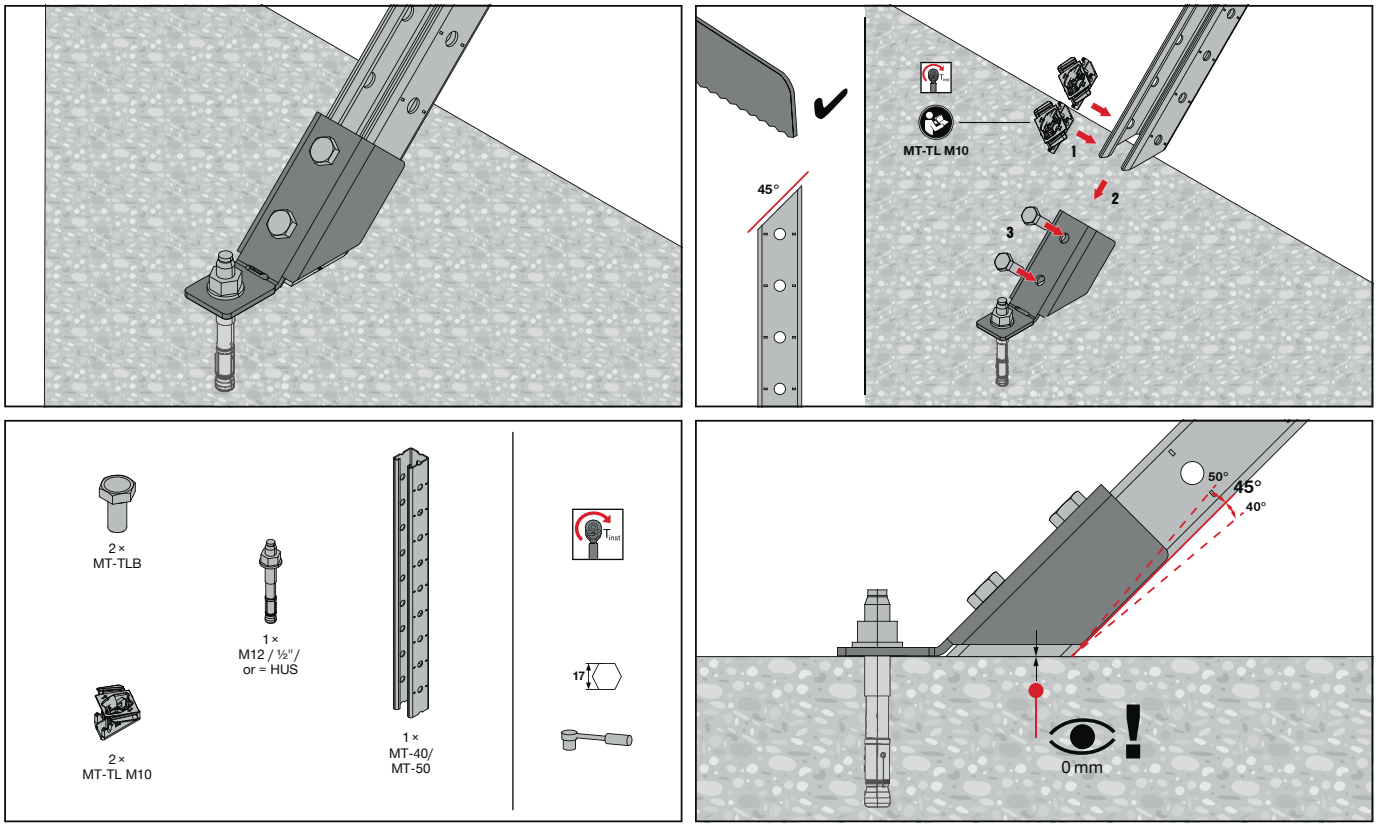


The latest IFU (Instruction For Use) is available on Hilti Online. Please check for any revisions before installing the product.

MT-AB-LL2 45 / MT-AB-LL2 45 OC

2294696-07.2020

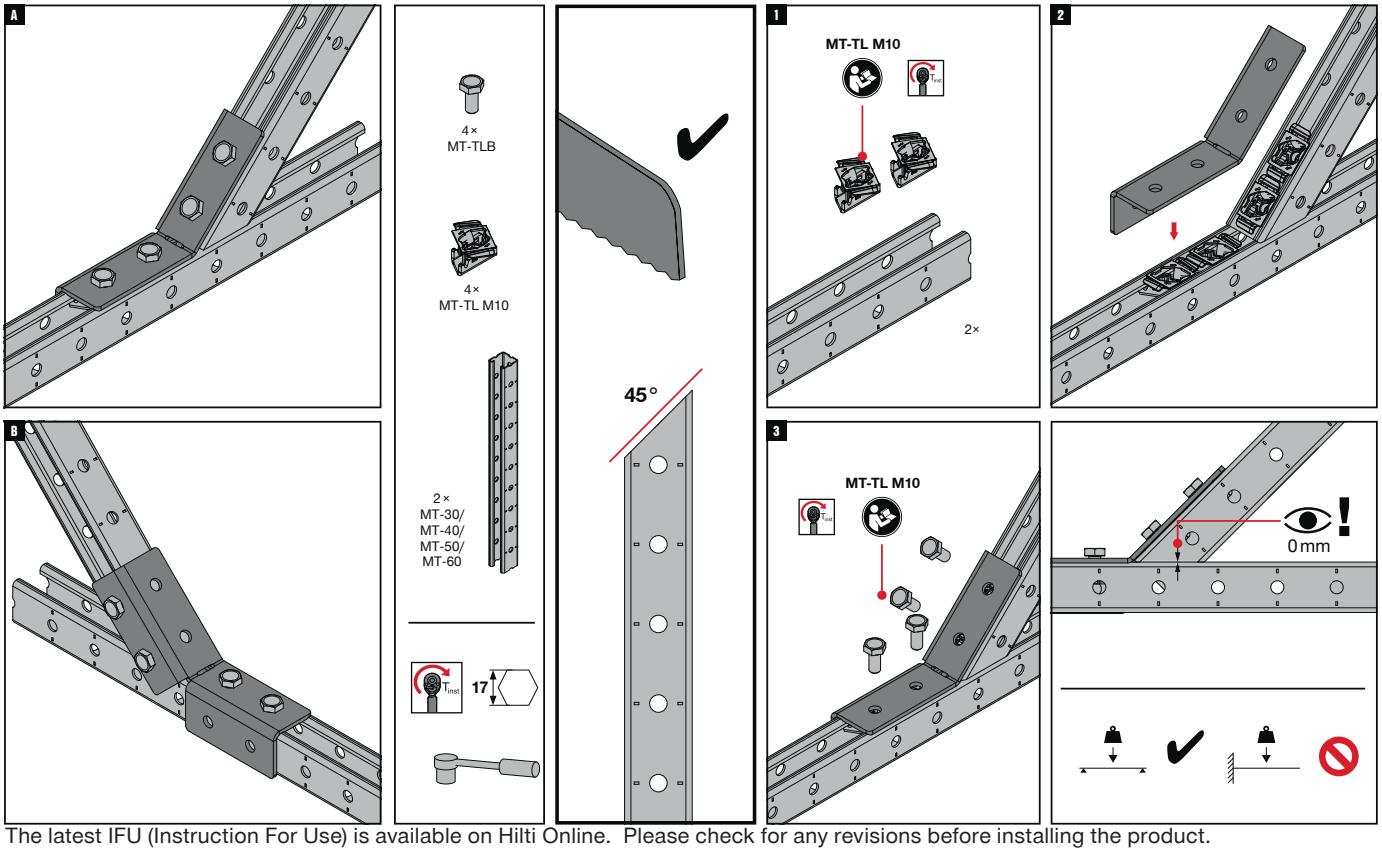


The latest IFU (Instruction For Use) is available on Hilti Online. Please check for any revisions before installing the product.

5

# MT Open C-channel (Strut) Base Material Connectors

Angle Brace, Channel Clamp

## Operation Instruction

MT-AB-A / MT-AB-A OC

2294694-07.2020

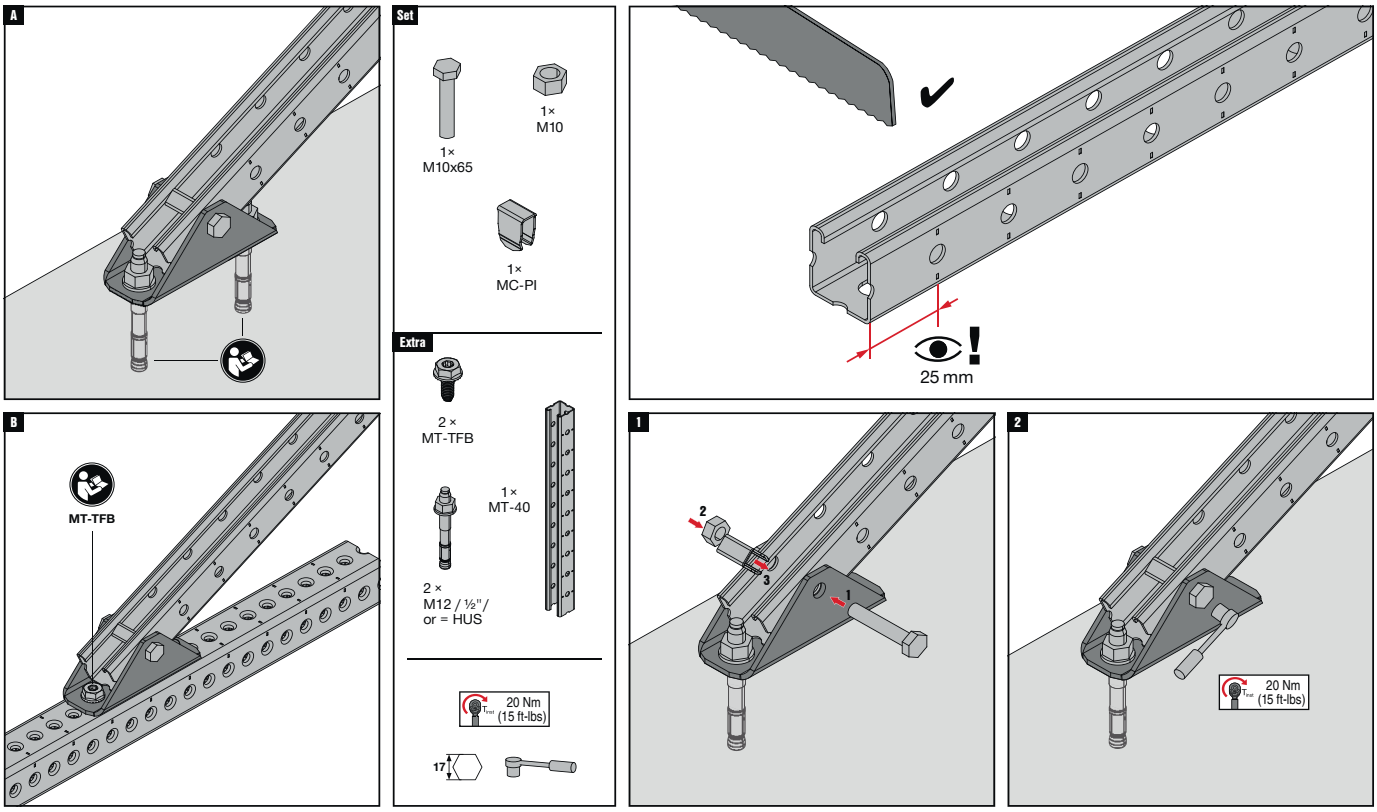


The latest IFU (Instruction For Use) is available on Hilti Online. Please check for any revisions before installing the product.

MT-CC-BC 40/50 / MT-CC-BS 40/50 / MT-CC-BC 40/50 OC / MT-CC-BS 40/50 OC

2325300-04.2021

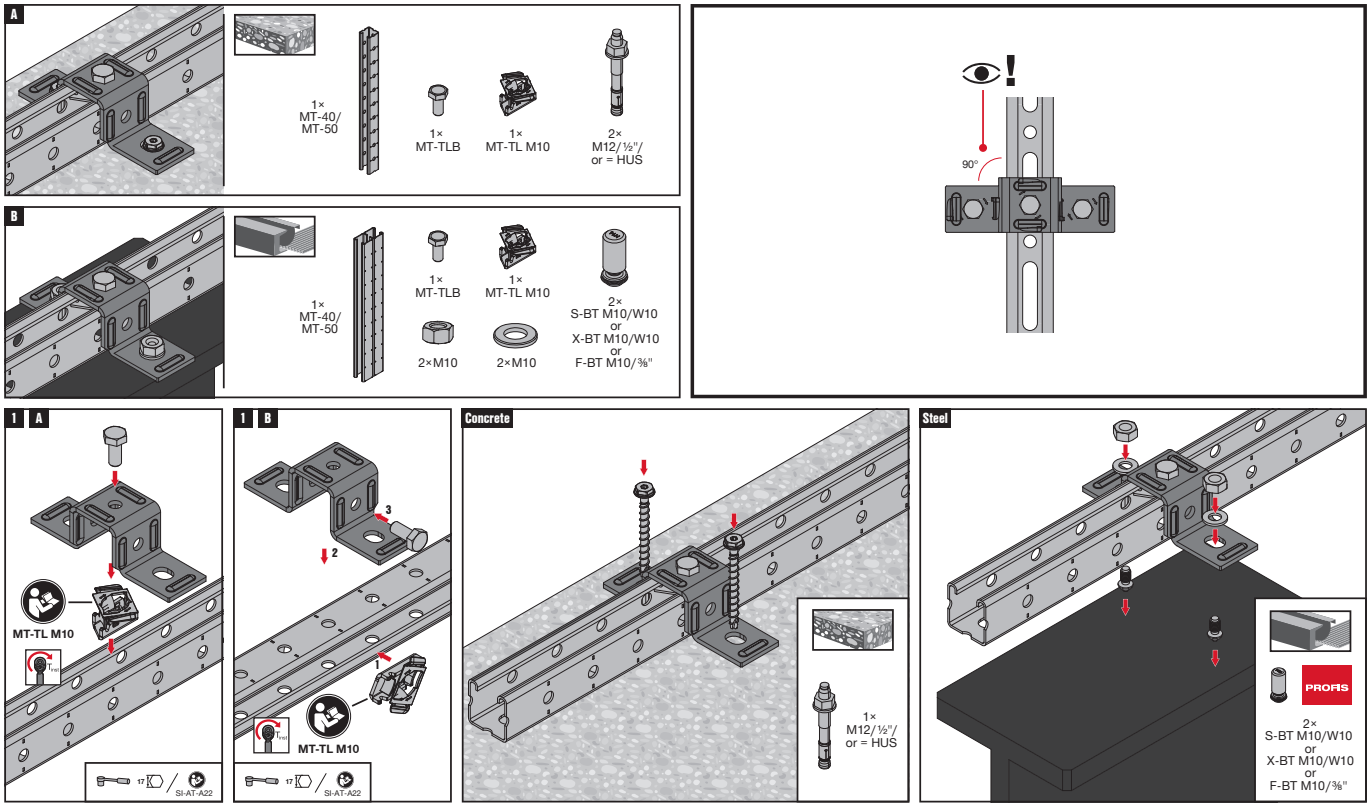


The latest IFU (Instruction For Use) is available on Hilti Online. Please check for any revisions before installing the product.

# MT Open C-channel (Strut) Base Material Connectors

Channel Clamp

## Operation Instruction

MT-CC-40/50 C OC

2359994-04.2022

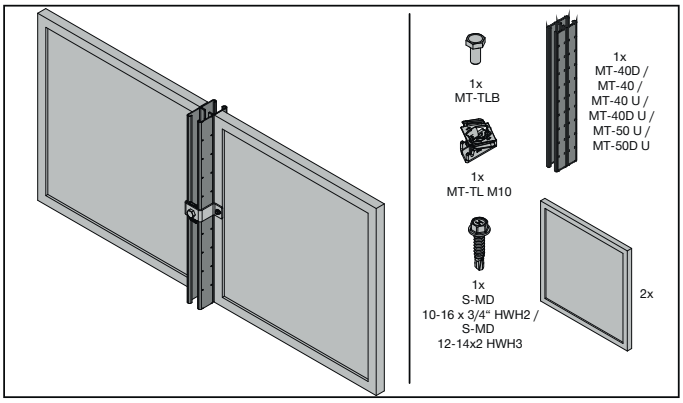


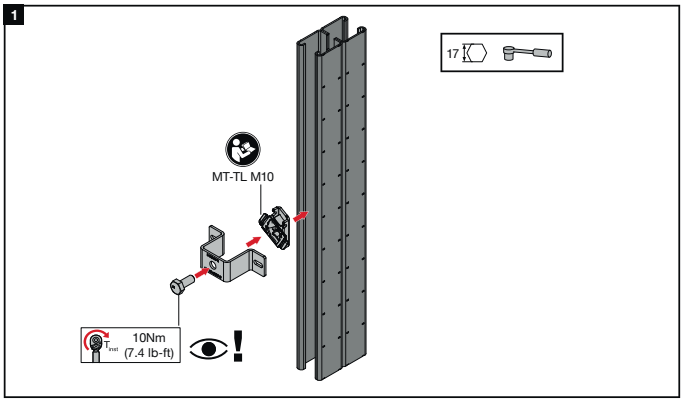


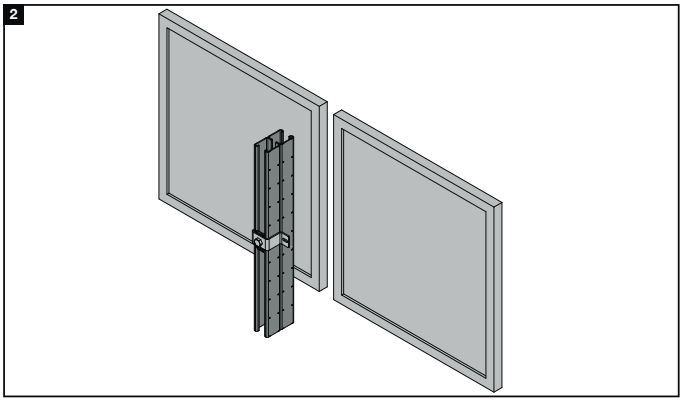


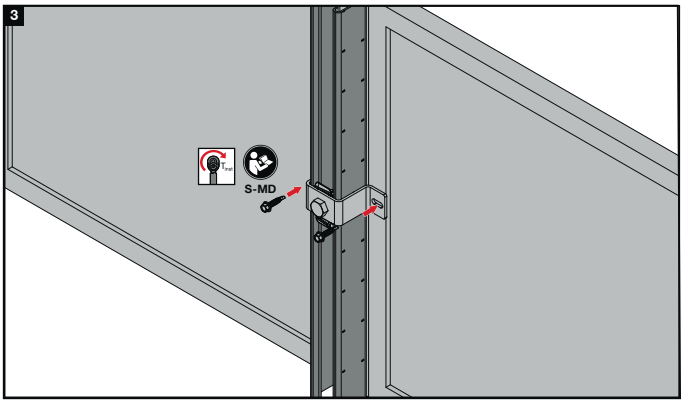


The latest IFU (Instruction For Use) is available on Hilti Online. Please check for any revisions before installing the product.

MT-CC-40/50 M OC

2359995-04.2022

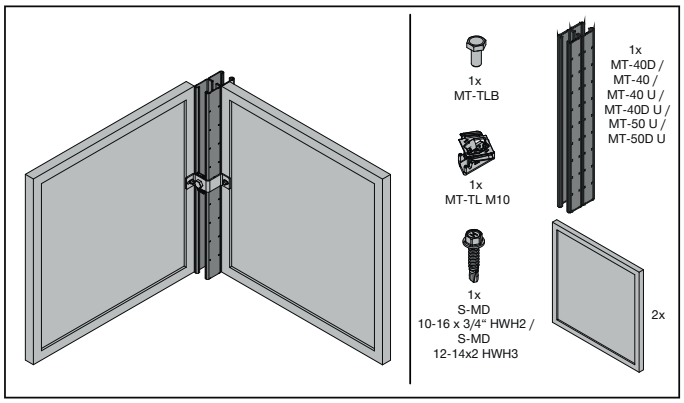


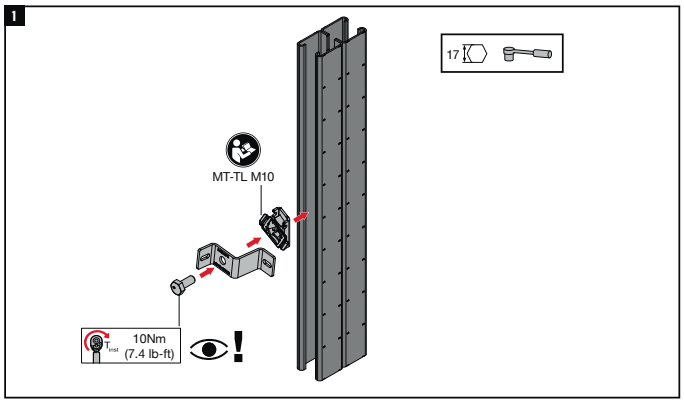


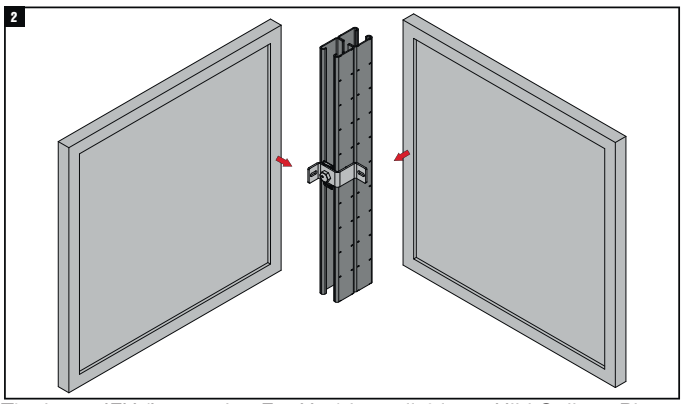


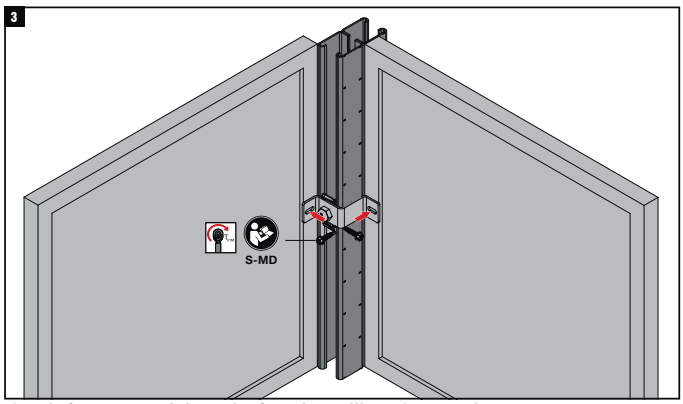


The latest IFU (Instruction For Use) is available on Hilti Online. Please check for any revisions before installing the product.

5

# MT Closed Profiles Base Material Connectors

## 90° Connectors - Outdoor

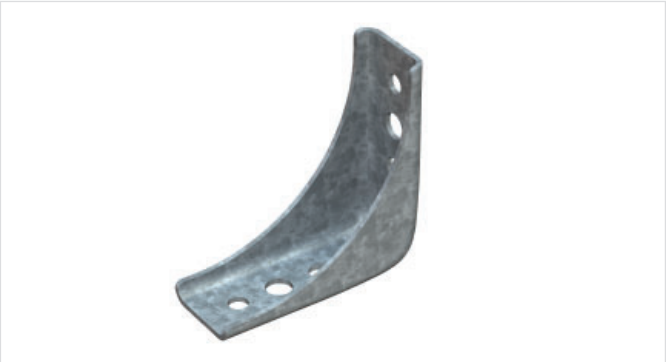

## Applications

- Right-angle connections between any MT closed profiles or strut channels
- Assembling metal framing for MEP support structures when resistance to 3D stresses is required
- Fastening MT strut channel to concrete floors, walls or ceilings

## Advantages

- Part of the Hilti MT system – an economical, all-in-one solution for virtually all modular MEP support structures
- Easy to install – one-step assembly using Hilti MT-TFB thread-forming bolts
- Adaptable – unlike welding, angle brackets allow you to modify strut channel framing during installation and for future MEP requirements

## Technical data

| | |
|---|---|
| **Material composition** | Q235 or better steel |
| **Surface finish** | Outdoor Coated - HDG |

## MT-C-GS OC Base Material Connector - Angle Connector - Outdoor

| Order Designation | Weight | Technical data | Sales pack quantity | Item number | |
|---|---|---|---|---|---|
| **MT-C-GS OC** | 400 g | Outdoor, low to moderate pollution (C3 / C4 - low) | 10 pc | **2272064** | 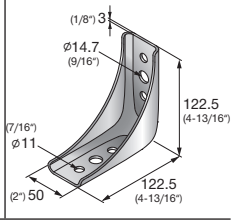  |

## MT-C-GL OC Base Material Connector - Angle Connector - Outdoor

| Order Designation | Weight | Technical data | Sales pack quantity | Item number | |
|---|---|---|---|---|---|
| **MT-C-GL OC** | 1161 g | Outdoor, low to moderate pollution (C3 / C4 - low) | 10 pc | **2272066** | 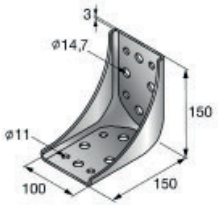  |

# MT Closed Profiles Base Material Connectors

## 90° Connectors - Outdoor

### Operation Instruction

MT-C-GS OC

2290665-06.2020

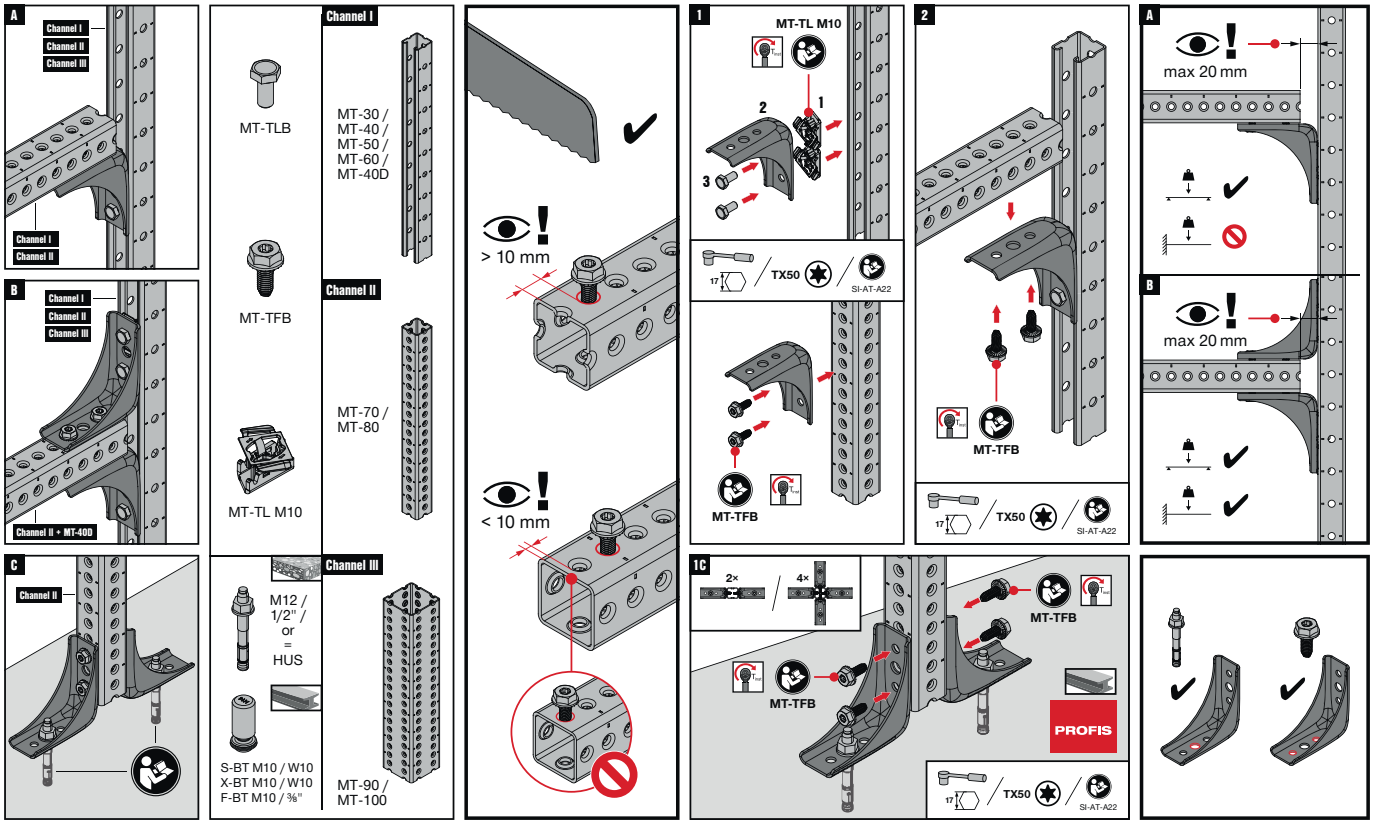


The latest IFU (Instruction For Use) is available on Hilti Online. Please check for any revisions before installing the product.

MT-C-GS A OC

2289567-09.2020

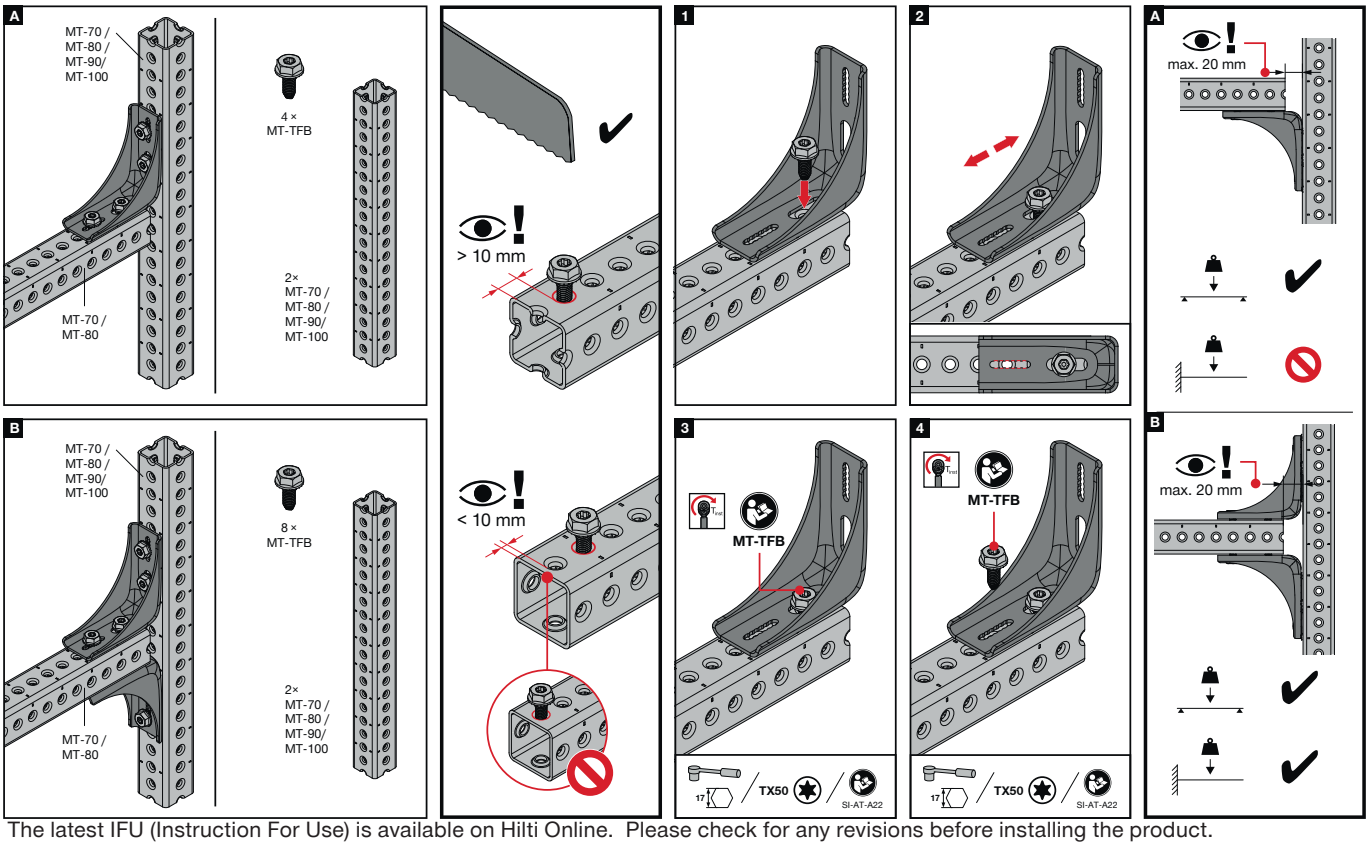


The latest IFU (Instruction For Use) is available on Hilti Online. Please check for any revisions before installing the product.

5

# MT Closed Profiles Base Material Connectors

## 90° Connectors - Outdoor

### Operation Instruction

MT-C-GL OC

2289566-07.2020

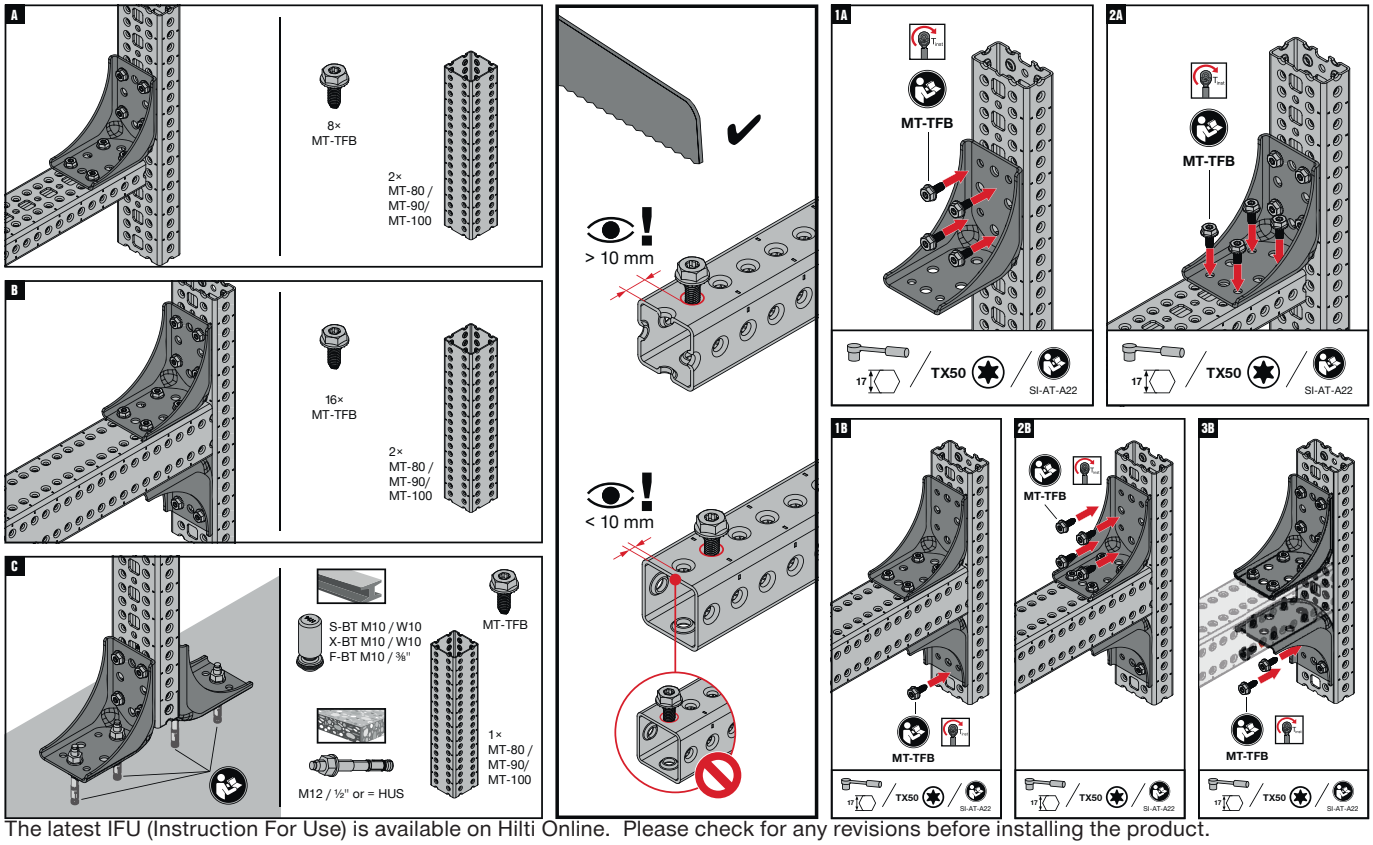


The latest IFU (Instruction For Use) is available on Hilti Online. Please check for any revisions before installing the product.

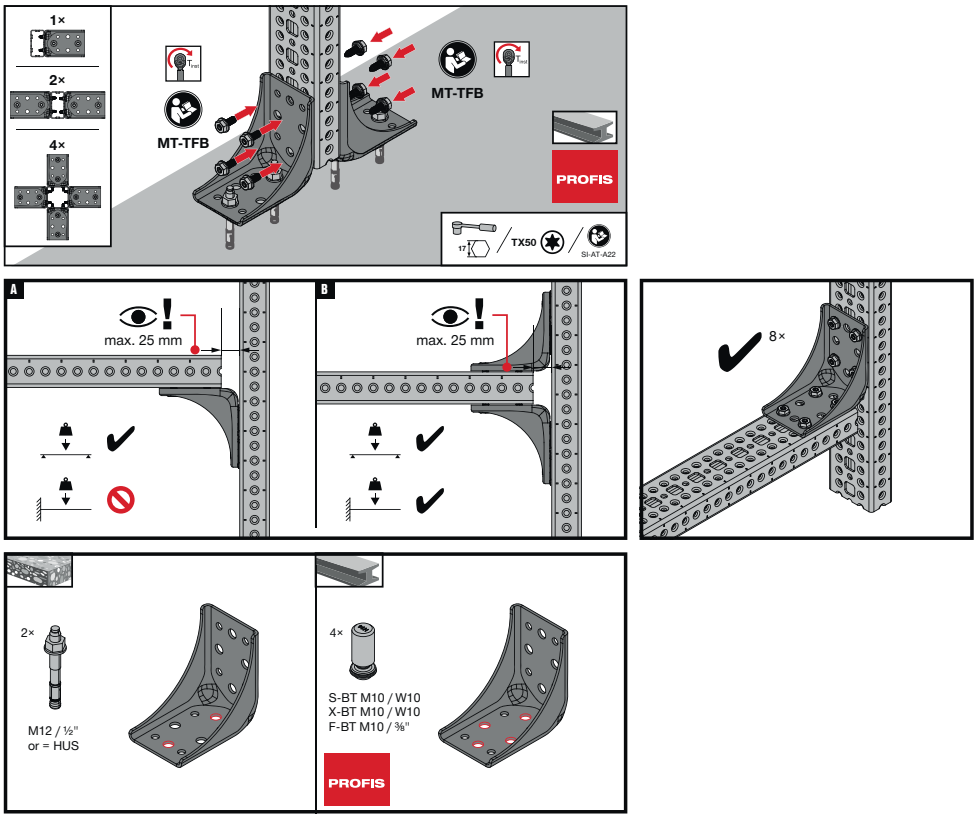


The latest IFU (Instruction For Use) is available on Hilti Online. Please check for any revisions before installing the product.

# MT Closed Profiles Base Material Connectors

90° Connectors - Outdoor

## Applications

- Fastening MT-70 and MT-80 closed profiles to concrete floors, walls or ceilings
- Fastening MT-70 and MT-80 closed profiles to structural steel
- Anchoring metal framing and MEP support structures with light loads to a base material

## Advantages

- Part of the Hilti MT system – an economical, all-in-one solution for virtually all modular MEP support structures
- Easy to install – one-step assembly using Hilti MT-TFB thread-forming bolts
- Adaptable – unlike welding, modular metal framing can be modified for future MEP requirements

## Technical data

| | |
|---|---|
| **Material composition** | Q235 or better steel |
| **Surface finish** | Outdoor Coated - HDG |

### MT-B-GS T OC Base Material Connector - Outdoor

| Order Designation | Weight | Technical data | Sales pack quantity | Item number | |
|---|---|---|---|---|---|
| **MT-B-GS T OC** | 2166 g | Outdoor, low to moderate pollution (C3 / C4 - low) | 2 pc | **2272100** | 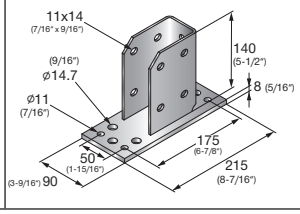  |

### MT-B-GS O4U OC Base Material Connector 4-hole - Outdoor

| Order Designation | Weight | Technical data | Sales pack quantity | Item number | |
|---|---|---|---|---|---|
| **MT-B-GS O4U OC** | 4730 g | Outdoor, low to moderate pollution (C3 / C4 - low) | 4 pc | **2272101** | 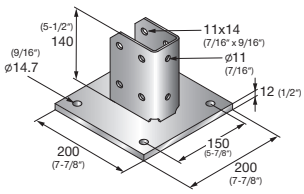  |

5

# MT Closed Profiles Base Material Connectors

90° Connectors - Outdoor

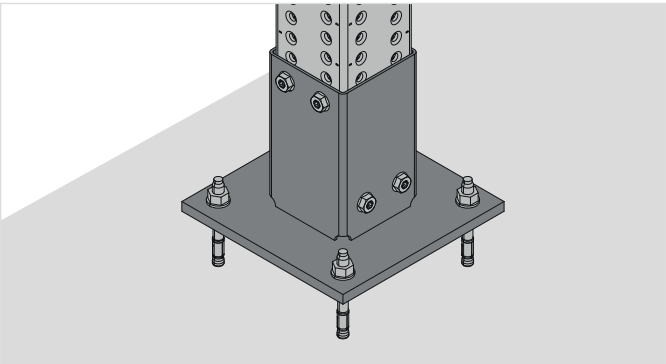

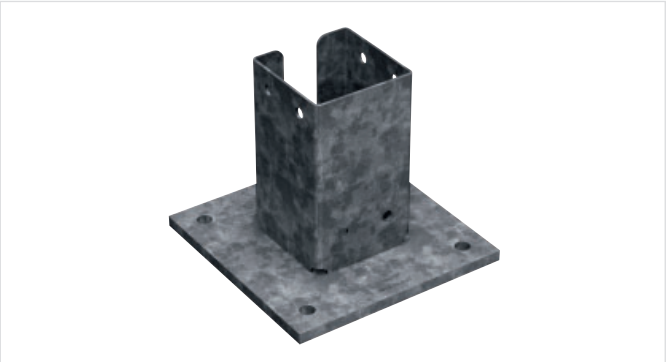

## Applications

- Fastening MT-90 closed profiles to concrete floors, walls or ceilings
- Anchoring metal framing and MEP support structures with heavy loads to a base material
- Suitable for outdoor environments with low to moderate pollution (C3)

## Advantages

- Part of the Hilti MT system – an economical, all-in-one solution for virtually all modular MEP support structures
- Easy to install – one-step assembly using Hilti MT-TFB thread-forming bolts
- Adaptable – unlike welding, modular post bases allow you to modify metal framing for future MEP requirements

## Technical data

| | |
|---|---|
| **Material composition** | Q235 or better steel |
| **Surface finish** | Outdoor Coated - HDG |

## MT-B-GL O4C OC Base Material Connector - Outdoor

| Order Designation | Weight | Technical Data | Sales pack quantity | Item number |
|---|---|---|---|---|
| **MT-B-GL O4C OC** | 6825g | Outdoor, low to moderate pollution (C3 / C4 - low) | 2 pc | **2343282** 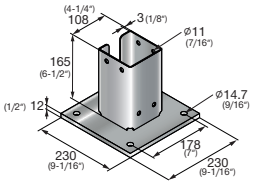  |

# MT Closed Profiles Base Material Connectors

## 90° Connectors - Outdoor

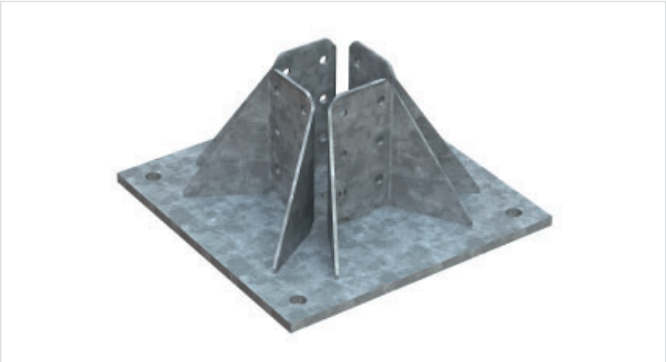

## Applications

- Fastening MT-90 closed profiles to concrete floors, walls or ceilings
- Anchoring metal framing and MEP support structures with heavy loads to a base material
- Suitable for use in moderately corrosive environments

## Advantages

- Part of the Hilti MT system – an economical, all-in-one solution for virtually all modular MEP support structures
- Easy to install – one-step assembly using Hilti MT-TFB thread-forming bolts
- Adaptable – unlike welding, modular post bases allow you to modify metal framing for future MEP requirements

## Technical data

| | |
|---|---|
| **Material composition** | Q235 or better steel |
| **Surface finish** | Outdoor Coated - HDG |

### MT-B-GL O4 OC Base Material Connector 4-hole - Outdoor

| Order Designation | Thickness | Weight | Technical data | Sales pack quantity | Item number | |
|---|---|---|---|---|---|---|
| **MT-B-GL O4 OC** | 12 mm | 14949 g | Outdoor, low to moderate pollution (C3 / C4 - low) | 1 pc | **2272103** | 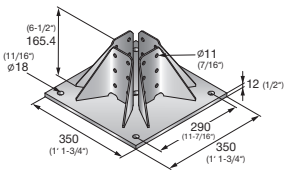  |

### MT-B-GXL O4 OC Base Material Connector 4-hole - Outdoor

| Order Designation | Thickness | Weight | Technical data | Sales pack quantity | Item number | |
|---|---|---|---|---|---|---|
| **MT-B-GXL O4 OC** | 12 mm | 17070 g | Outdoor, low to moderate pollution (C3 / C4 - low) | 1 pc | **2272104** | 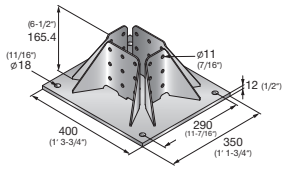  |

5

# MT Closed Profiles Base Material Connectors

## 90° Connectors - Outdoor

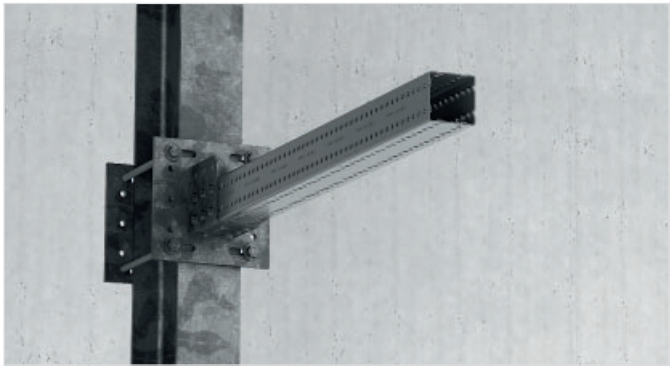

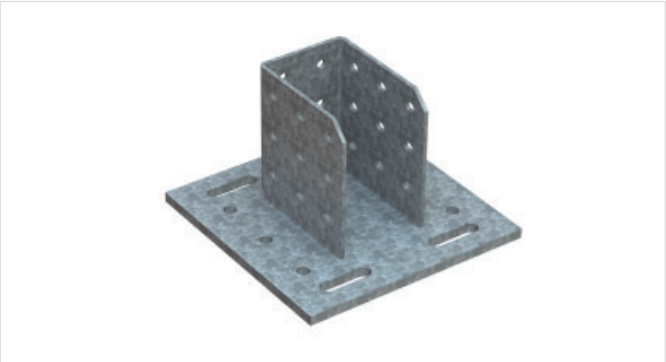

## Applications

- Fastening MT-90 and MT-100 closed profiles to structural steel
- Anchoring metal framing and MEP support structures with light loads to a base material
- Suitable for use in moderately corrosive environments

## Advantages

- Part of the Hilti MT system – an economical, all-in-one solution for virtually all modular MEP support structures
- Easy to install – one-step assembly using Hilti MT-TFB thread-forming bolts
- Adjustable – four slotted anchor holes to simplify baseplate positioning and fastening

## Technical data

| | |
|---|---|
| **Material composition** | Q355 or better steel |
| **Surface finish** | Outdoor Coated - HDG |

## MT-B-GXL S1 OC Base Material Connector To Steel - Outdoor

| Order designation | Thickness | Weight | Technical data | Sales pack quantity | Item number | |
|---|---|---|---|---|---|---|
| **MT-B-GXL S1 OC** | 15 mm | 9402 g | Outdoor, low to moderate pollution (C3 / C4 - low) | 2 pc | **2272106** | 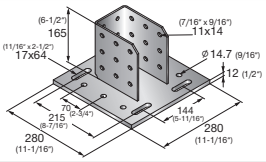 |



## MT-B-GXL S2 OC Base Material Connector To Steel - Outdoor

| Order designation | Thickness | Weight | Technical data | Sales pack quantity | Item number | |
|---|---|---|---|---|---|---|
| **MT-B-GXL S2 OC** | 15 mm | 9366 g | Outdoor, low to moderate pollution (C3 / C4 - low) | 2 pc | **2272107** | 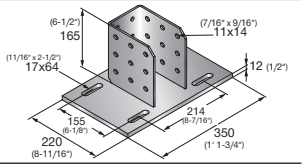 |



## MT-B-GXL S3 OC Base Material Connector To Steel - Outdoor

| Order designation | Thickness | Weight | Technical data | Sales pack quantity | Item number | |
|---|---|---|---|---|---|---|
| **MT-B-GXL S3 OC** | 15 mm | 10816 g | Outdoor, low to moderate pollution (C3 / C4 - low) | 2 pc | **2272108** | 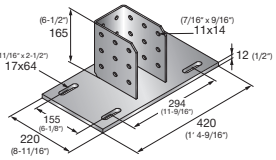 |

# MT Closed Profiles Base Material Connectors

## Angle Brace - Outdoor

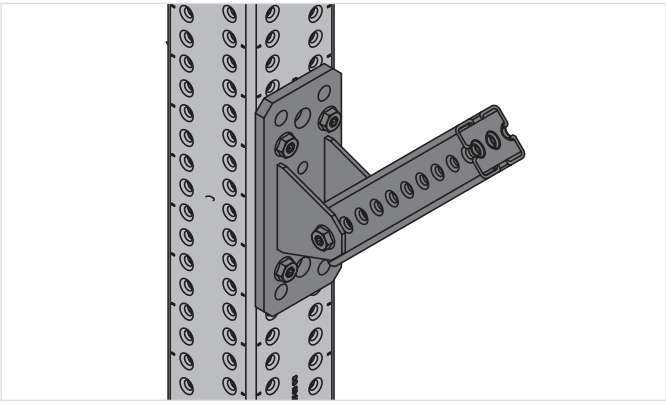

## Applications

- Assembling and bracing modular support structures consisting of MT-70 and MT-80 closed profiles
- Fastening modular support structures to concrete and steel
- Suitable for use in moderately corrosive environments

## Advantages

- Versatile – use it as a closed profile-to-closed profile connector, for angle braces or for fastening modular support structures to concrete and steel
- Compatible with powder-actuated threaded studs for steel and MT Thread Forming Bolt channel connectors – for much faster, adaptable assembly
- Corrosion resistance – hot-dip galvanized to help protect against moisture and chemical corrosion

## Technical data

| | |
|---|---|
| **Material composition** | Q355 or better steel |
| **Surface finish** | Outdoor Coated - HDG |

## MT-B-GS AB OC Angle Brace - Outdoor

| Order Designation | Thickness | Weight | Technical data | Sales pack quantity | Item number | |
|---|---|---|---|---|---|---|
| **MT-B-GS AB OC** | 10 mm | 1640 g | Outdoor, low to moderate pollution (C3 / C4 - low) | 8 pc | **2332787** | 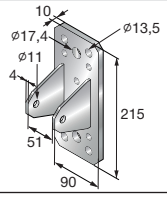  |

5

# MT Closed Profiles Base Material Connectors

## Angle Brace - Outdoor

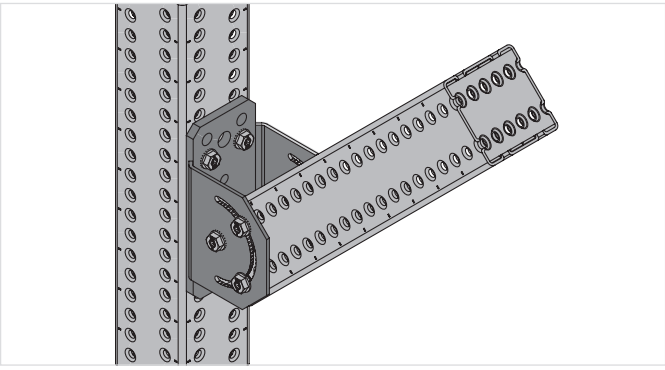

## Applications

- Mounting MT-80, MT-90 and MT-100 closed profiles on inclined steel surfaces
- Mounting MT-80, MT-90 and MT-100 at an angle ranging from +/- 90 degrees for bracing or long span supports
- Fastening heavy-duty, floor-mounted single pipe supports

## Advantages

- Higher load resistance – more bolting points and stronger construction than previous Hilti baseplates
- Corrosion resistance – hot-dip galvanized to help protect against moisture and chemical corrosion
- Part of the Hilti MT system – an economical, all-in-one solution for virtually all modular MEP support structures

## Technical data

| | |
|---|---|
| **Material composition** | Q355 or better steel |
| **Surface finish** | Outdoor Coated - HDG |

### MT-B GL AB OC Angle Brace - Outdoor

| Order Designation | Thickness | Technical data | Sales pack quantity | Item number |
|---|---|---|---|---|
| **MT-B GL AB OC** | 10 mm | Outdoor, low to moderate pollution (C3 / C4 - low) | 6 pc | **2353811** 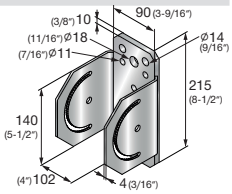  |

# MT Closed Profiles Base Material Connectors

## Starter Bracket - Outdoor

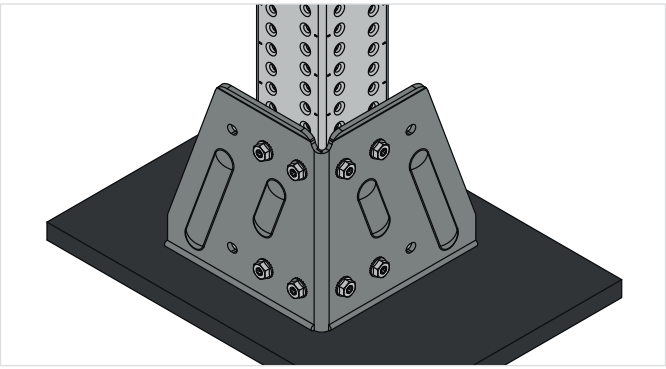

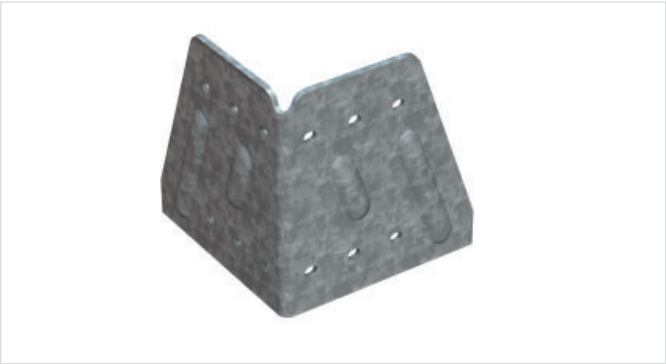

## Applications

- Creating base connectors for MT-70, MT-80, MT-90 and MT-100 closed profiles on structural steel

## Advantages

- Part of the Hilti MT system – an economical, all-in-one solution for virtually all modular MEP support structures
- Versatile – creates a post base connection at any location on structural steel
- Simplicity – one WS bracket can be used for all MT closed profiles: MT-70, 80, 90 and 100

## Technical data

| | |
|---|---|
| **Material composition** | Q355 or better steel |
| **Surface finish** | Not Galvanized |

## MT-B-G WS NC Starter Bracket

| Order Designation | Thickness | Weight | Technical data | Sales pack quantity | Item number | |
|---|---|---|---|---|---|---|
| **MT-B-G WS NC** | 6 mm | 4345 g | Outdoor, low to moderate pollution (C3 / C4 - low) | 4 pc | **2272109** | 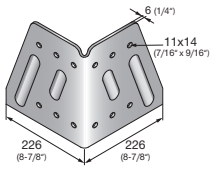  |

5

# MT Closed Profiles Base Material Connectors

## Angle Connector - Outdoor

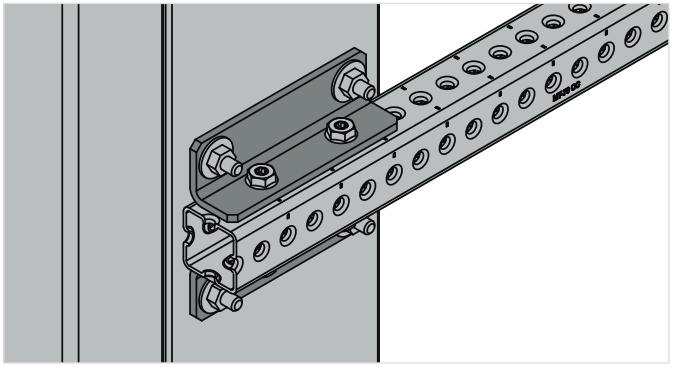

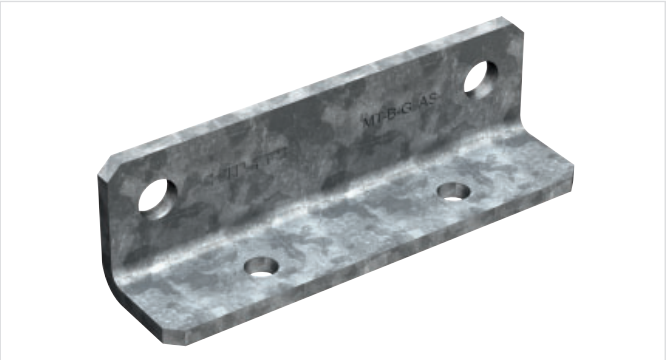

## Applications

- Fastening MT-70 and MT-80 closed profiles to steel beams
- Suitable for use in moderately corrosive environments

## Advantages

- A faster and more economical solution for installing closed profile cantilevers directly to steel beams
- Compatible with powder-actuated threaded studs for steel and MT Thread Forming Bolt channel connectors – for much faster, adaptable assembly
- Corrosion resistance – hot-dip galvanized to help protect against moisture and chemical corrosion

## Technical data

| | |
|---|---|
| **Material composition** | Q355 or better steel |
| **Surface finish** | Outdoor Coated - HDG |

### MT-B-G AS OC Base connector (outdoor)

| Order Designation | Thickness | Weight | Technical data | Sales pack quantity | Item number | |
|---|---|---|---|---|---|---|
| **MT-B-G AS OC** | 6 mm | 560 g | Outdoor, low to moderate pollution (C3 / C4 - low) | 10 pc | **2332781** | 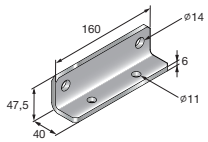  |

# MT Closed Profiles Base Material Connectors

## 90° Connectors - Outdoor

### **Technical data** Baseplate

| Item image | Load drawing | Order Designation | + Fz | - Fz | ± Fx | ± Fy |
|---|---|---|---|---|---|---|
|  | 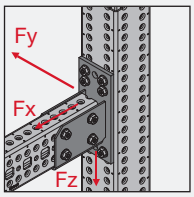  | **MT-B-GS T OC** | 25,9 kN | 15,0 kN | 20,4 kN | 8,5 kN |
|  | 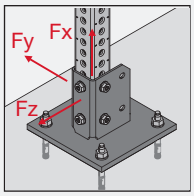  | **MT-B-GS O4U OC** | 26,4 | 18,0 kN | 53,9 kN | 16,0 kN |
|  | 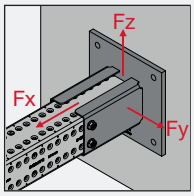  | **MT-B-GL O4C OC** | 14,7 kN | 14,47 kN | 44,3 kN | 10,1 kN |
| 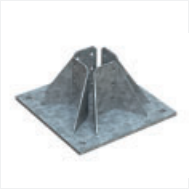 | 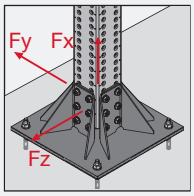  | **MT-B-GL O4 OC** | 55,2 kN | 55,2 kN | 122,4 kN | 55,2 kN |
| 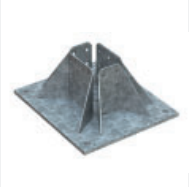 | 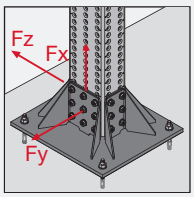  | **MT-B-GXL O4 OC** | 93,4 kN | 93,4 kN | 145,7 kN | 87,7 kN |
| 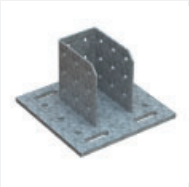 | 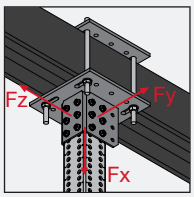  | **MT-B-GXL S1 OC** | 14,9 kN | 14,9 kN | 74,7 kN | 14,9 kN |
|  | 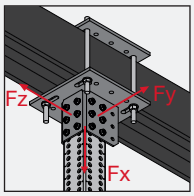  | **MT-B-GXL S2 OC** | 14,9 kN | 14,9 kN | 66,1 kN | 14,9 kN |

**Design note**
- Shown load values are recommended values with partial safety factors for actions and resistance included
- Design value = 1.5 * recommended value
- The design resistance of the products is defined in accordance with EN1993

5

# MT Closed Profiles Base Material Connectors
## 90° Connectors, Angle Brace, Starter Bracket - Outdoor

### **Technical data** Base Connector

| Item image | Load drawing | Order Designation | + Fz | - Fz | ± Fx | ± Fy |
|---|---|---|---|---|---|---|
| 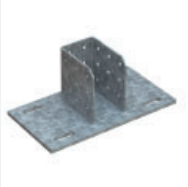 | 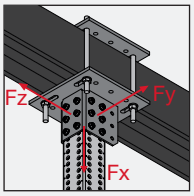  | **MT-B-GXL S3 OC** | 14,9 kN | 14,9 kN | 40,2 kN | 14,9 kN |

**Design note**
- Shown load values are recommended values with partial safety factors for actions and resistance included
- Design value = 1.5 * recommended value
- The design resistance of the products is defined in accordance with EN1993

### **Technical data** Angle Brace

| Item image | Load drawing | Order Designation | + Fz | ± Fx | ± Fy |
|---|---|---|---|---|---|
|  | 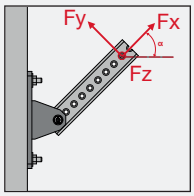  | **MT-B-GS AB OC** | 3,0 kN | 18,1 kN | 18,1 kN |

**Design note**
- Shown load values are recommended values with partial safety factors for actions and resistance included
- Design value = 1.5 * recommended value
- The design resistance of the products is defined in accordance with EN1993

### **Technical data** Starter Bracket

| Item image | Load drawing | Order Designation | + Fz | - Fz | ± Fx | ± Fy |
|---|---|---|---|---|---|---|
| 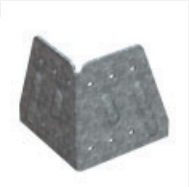 | 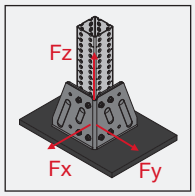  | **MT-B-GS WS NC** | 84,7 kN | 84,7 kN | 22,2 kN | 22,2 kN |

**Design note**
- Load values are only valid if MT-90 Closed profile are used.
- Shown load values are recommended values with partial safety factors for actions and resistance included
- Design value = 1.5 * recommended value
- The design resistance of the products is defined in accordance with EN1993

### **Technical data** Base Connector

| Item image | Load drawing | Order Designation | + Fz | ± Fx | ± Fy |
|---|---|---|---|---|---|
|  | 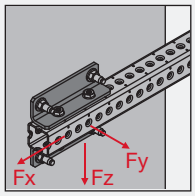  | **MT-B-G AS OC** | 23,9 kN | 47,1 kN | 7,1 kN |

**Design note**
- Shown load values are recommended values with partial safety factors for actions and resistance included
- Design value = 1.5 * recommended value
- The design resistance of the products is defined in accordance with EN1993

# MT Closed Profiles Base Material Connectors

## 90° Connector - Outdoor

### Operation Instruction

MT-B-GS T OC

2294558-07.2020

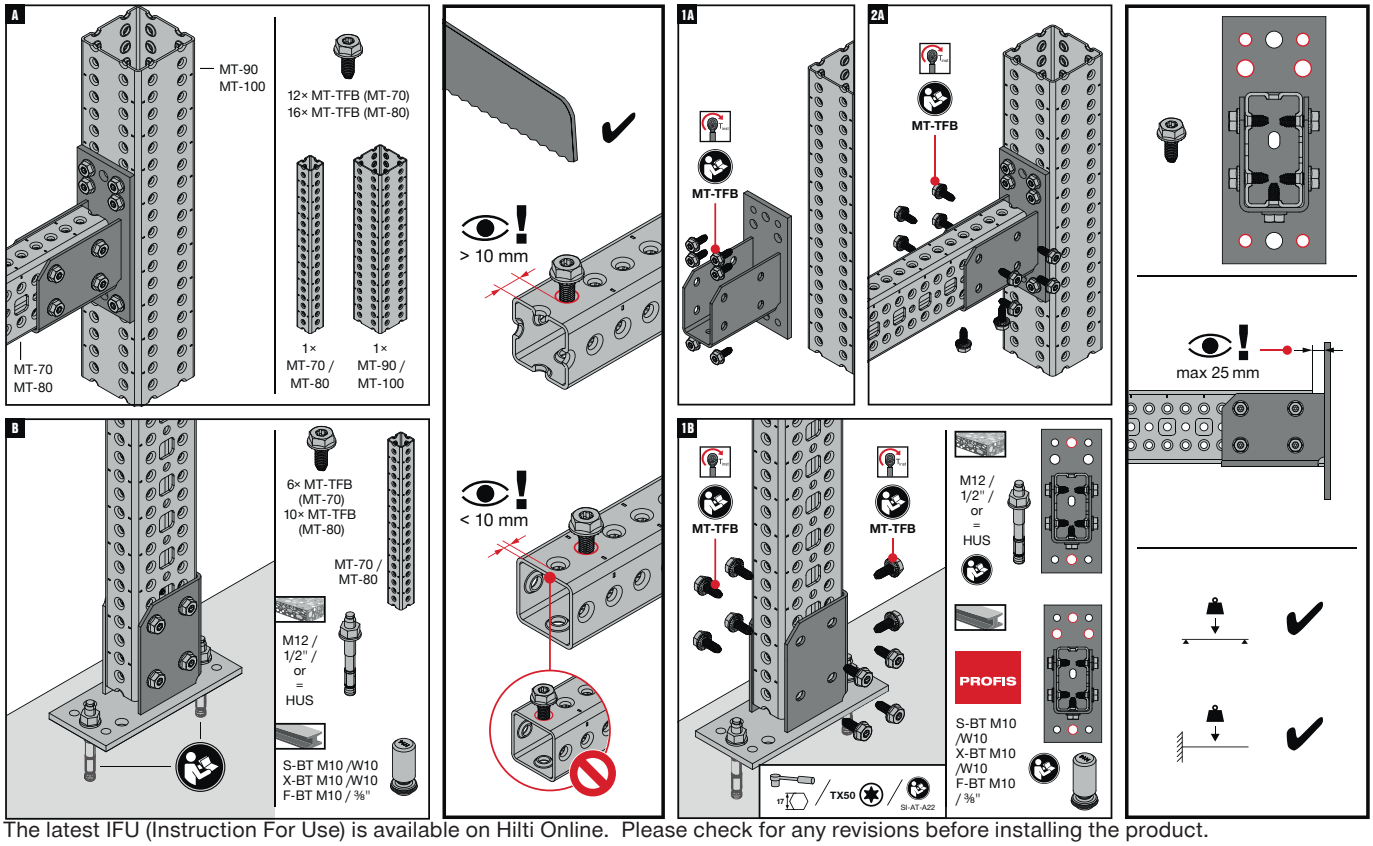


The latest IFU (Instruction For Use) is available on Hilti Online. Please check for any revisions before installing the product.

MT-B-GS O4U OC

2294559-06.2020

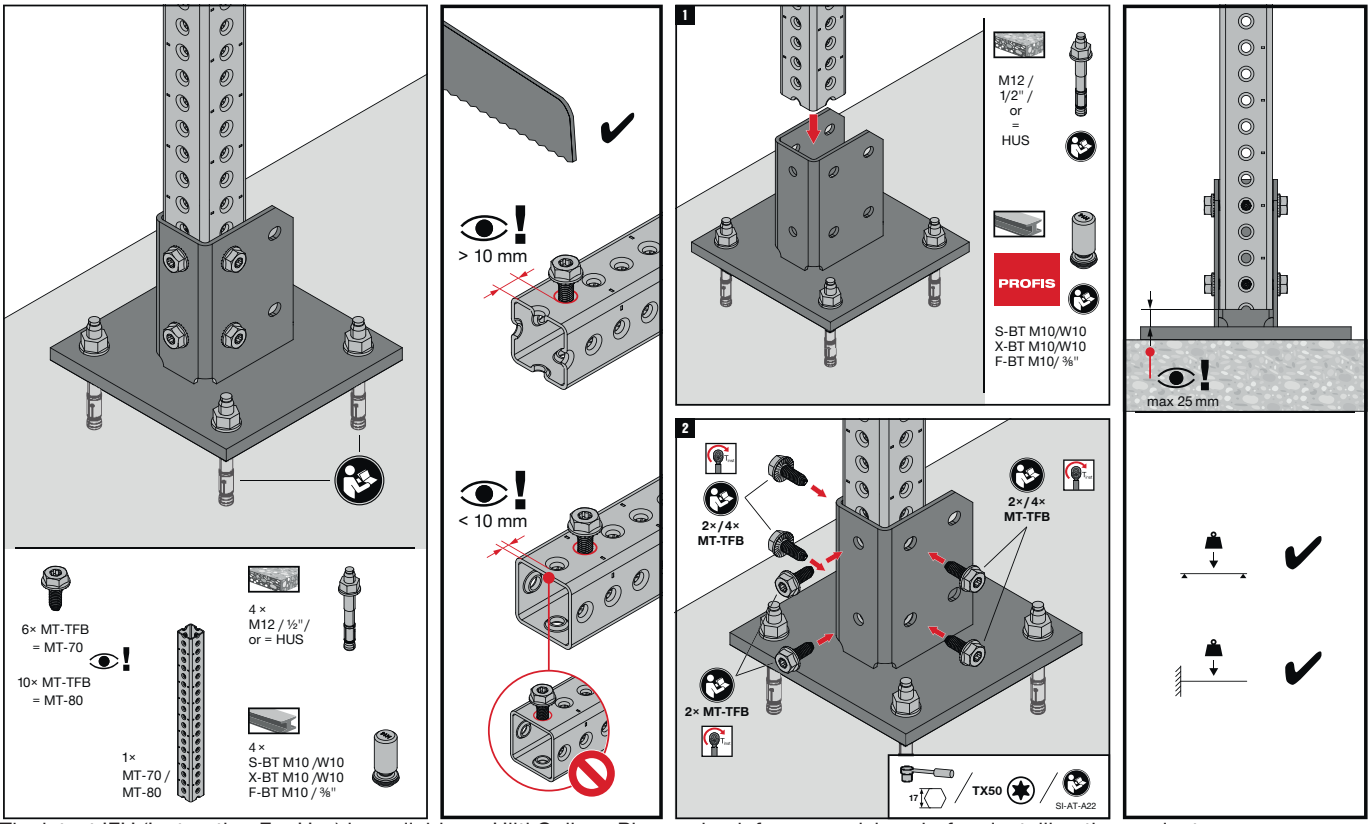


The latest IFU (Instruction For Use) is available on Hilti Online. Please check for any revisions before installing the product.

5

# MT Closed Profiles Base Material Connectors

## 90° Connector - Outdoor

### Operation Instruction

MT-B-GL O4C OC

2347956-12.2021

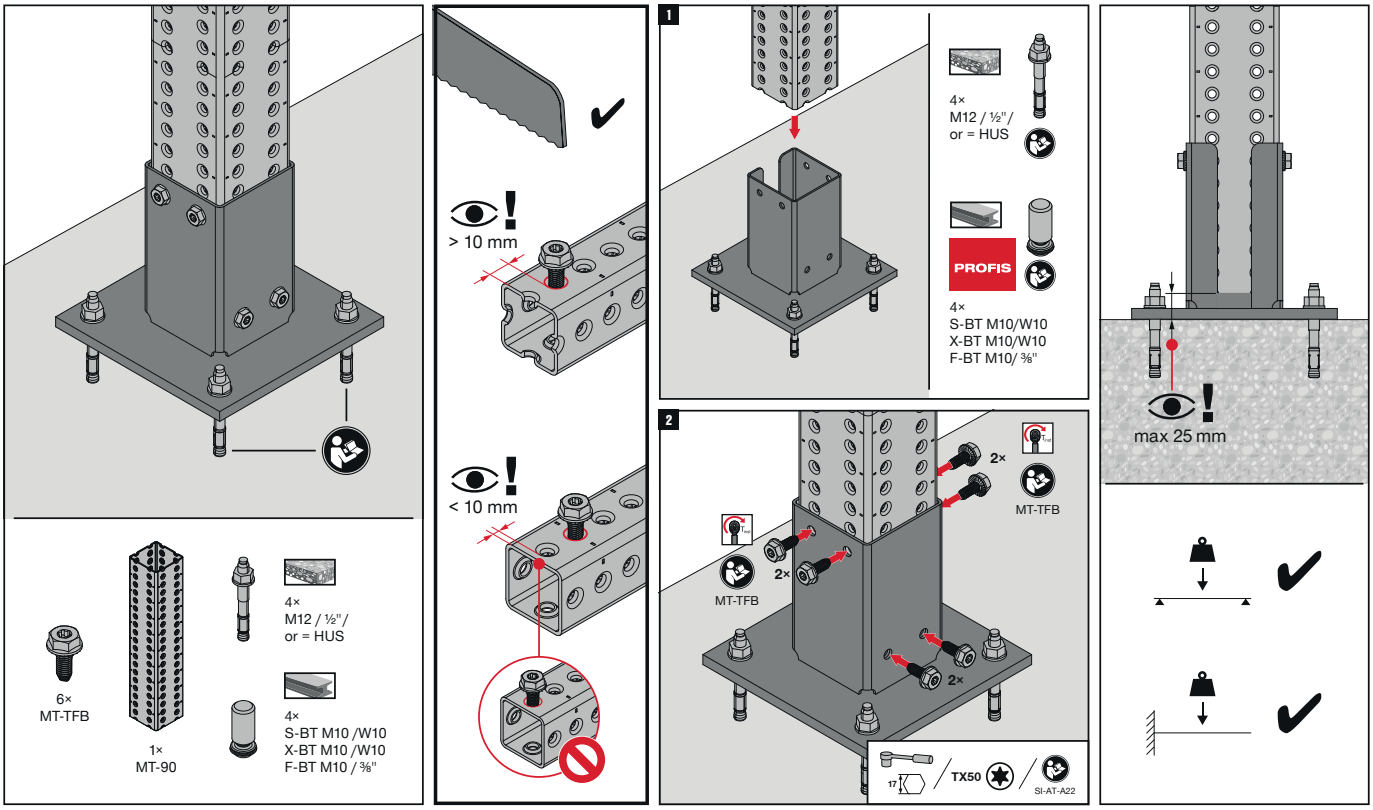


The latest IFU (Instruction For Use) is available on Hilti Online. Please check for any revisions before installing the product.

MT-B-GL O4 OC / MT-B-GXL O4 OC

2294690-05.2020

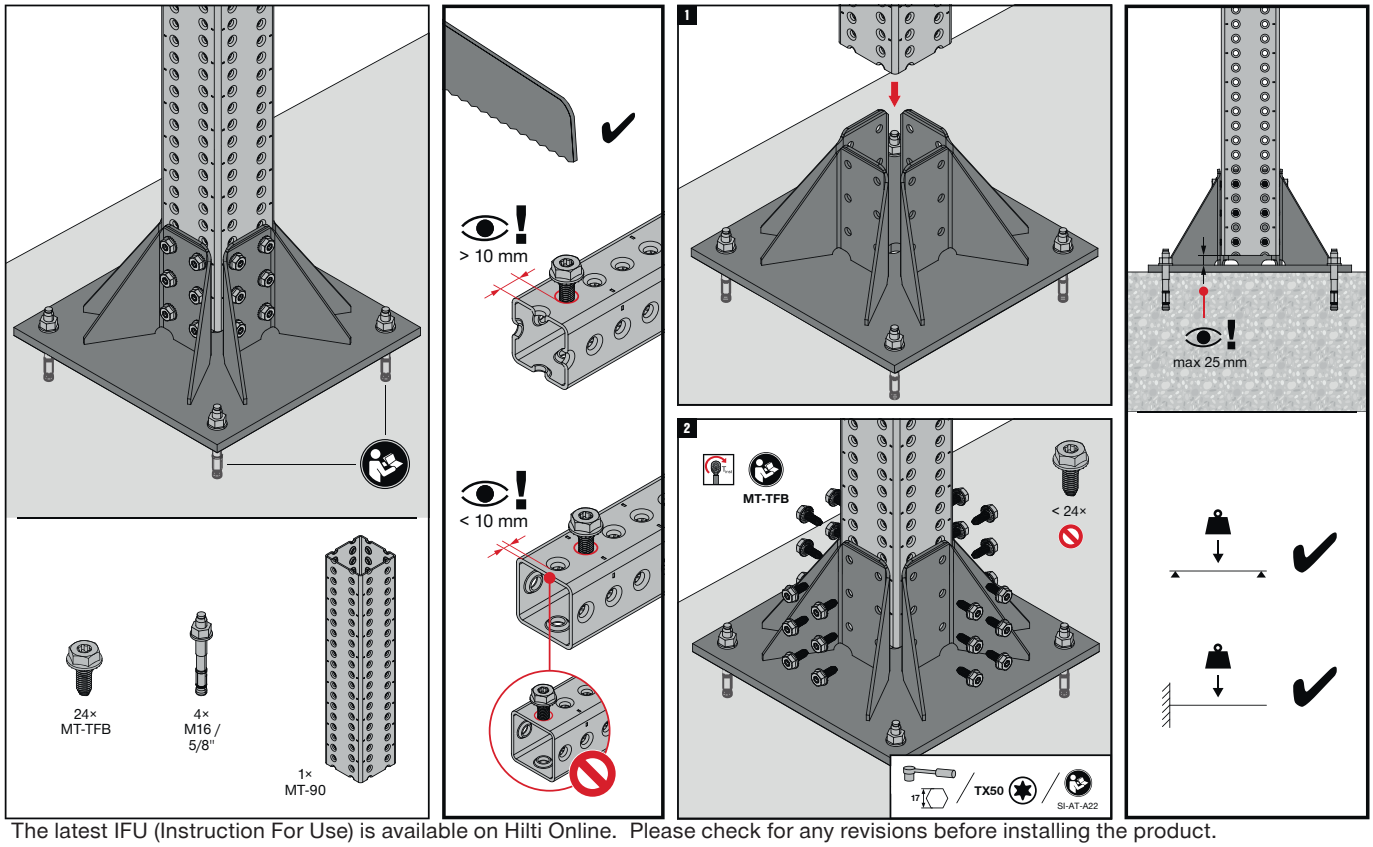


The latest IFU (Instruction For Use) is available on Hilti Online. Please check for any revisions before installing the product.

# MT Closed Profiles Base Material Connectors

## 90° Connector, Angle Brace - Outdoor

### Operation Instruction

MT-B-GXL S1 OC / MT-B-GXL S2 OC / MT-B-GXL S3 OC

2294692-09.2020

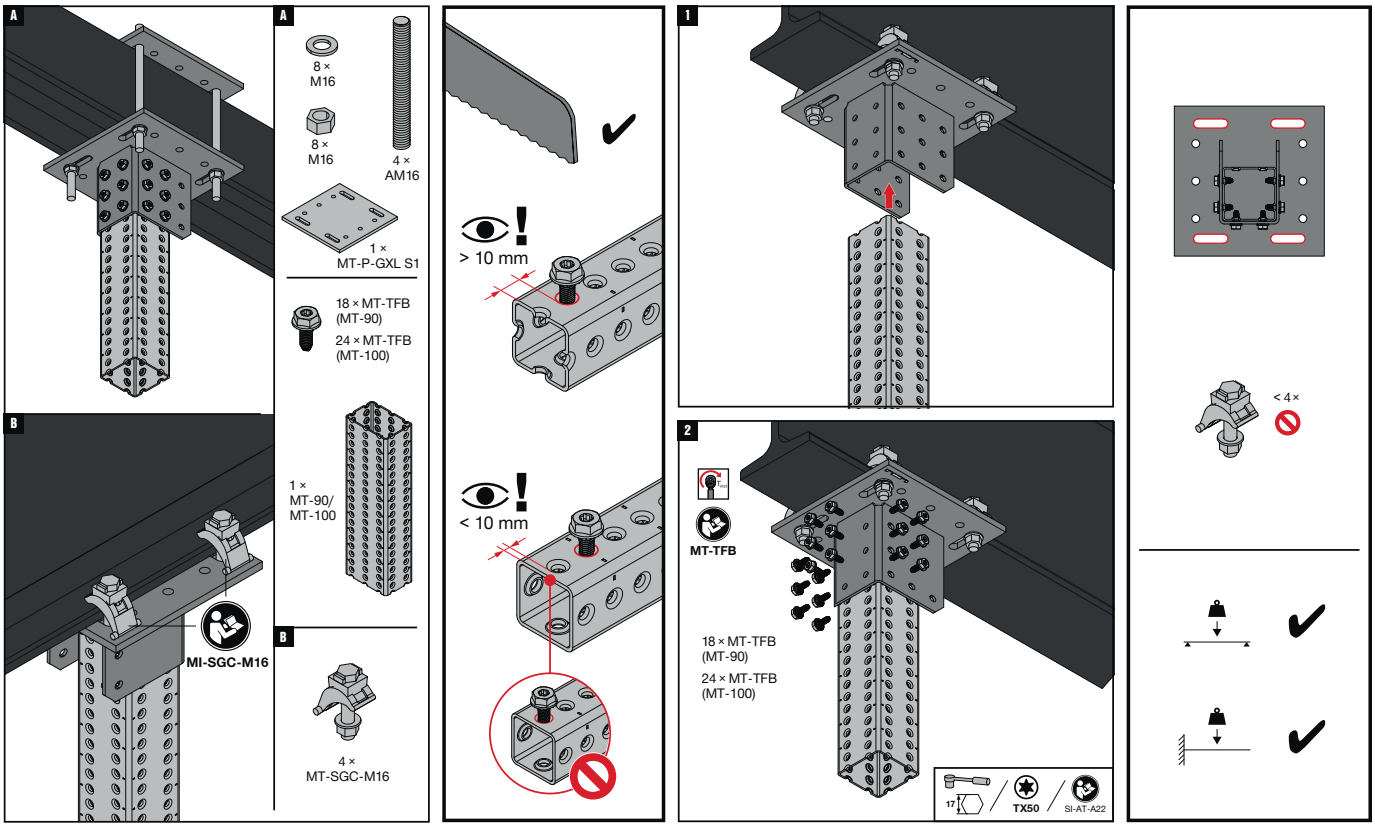


The latest IFU (Instruction For Use) is available on Hilti Online. Please check for any revisions before installing the product.

## MT-B-GS AB OC

2334522-08.2021

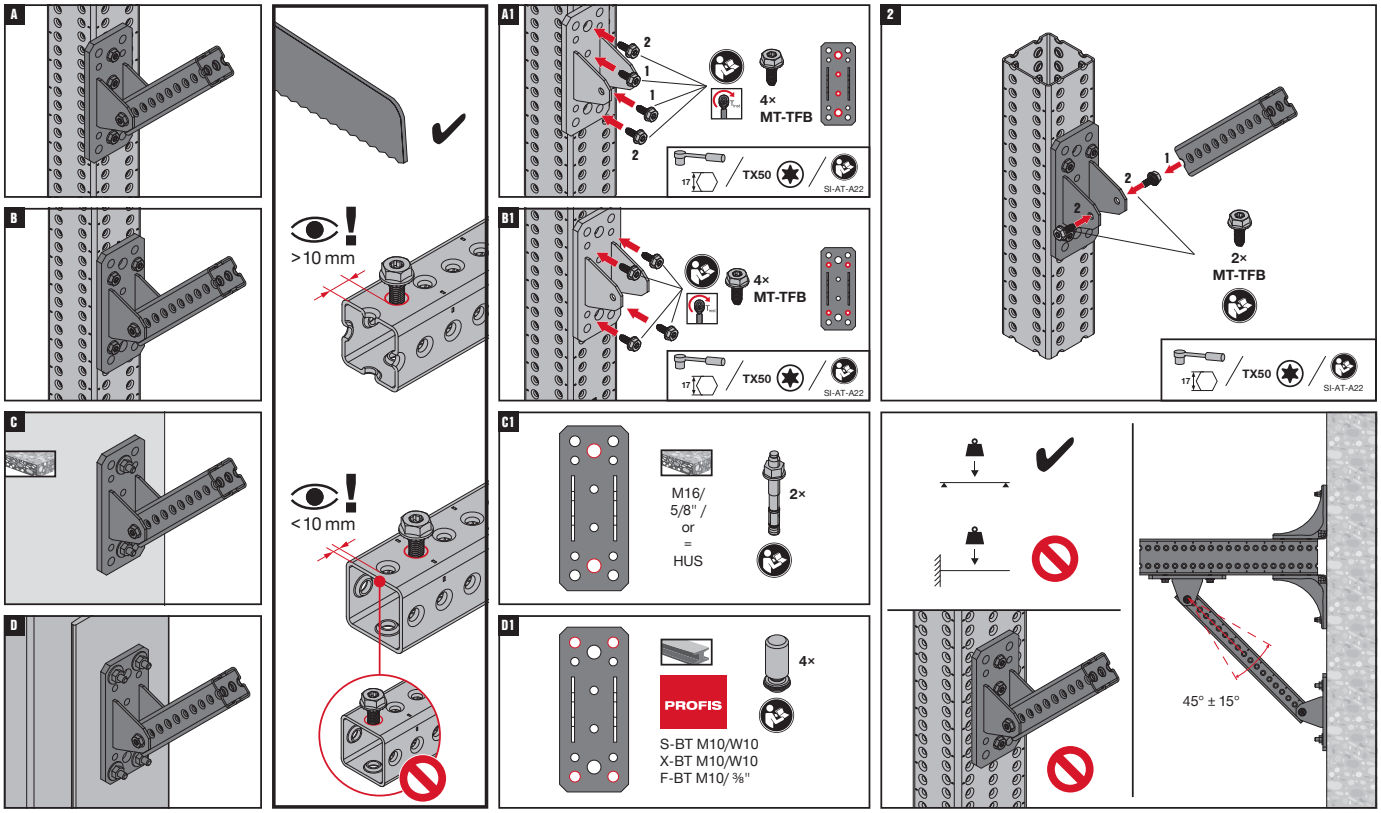


The latest IFU (Instruction For Use) is available on Hilti Online. Please check for any revisions before installing the product.

5

# MT Closed Profiles Base Material Connectors

## Angle Brace, Starter Bracket - Outdoor

### Operation Instruction

MT-B-GL AB OC

2359996-04.2022

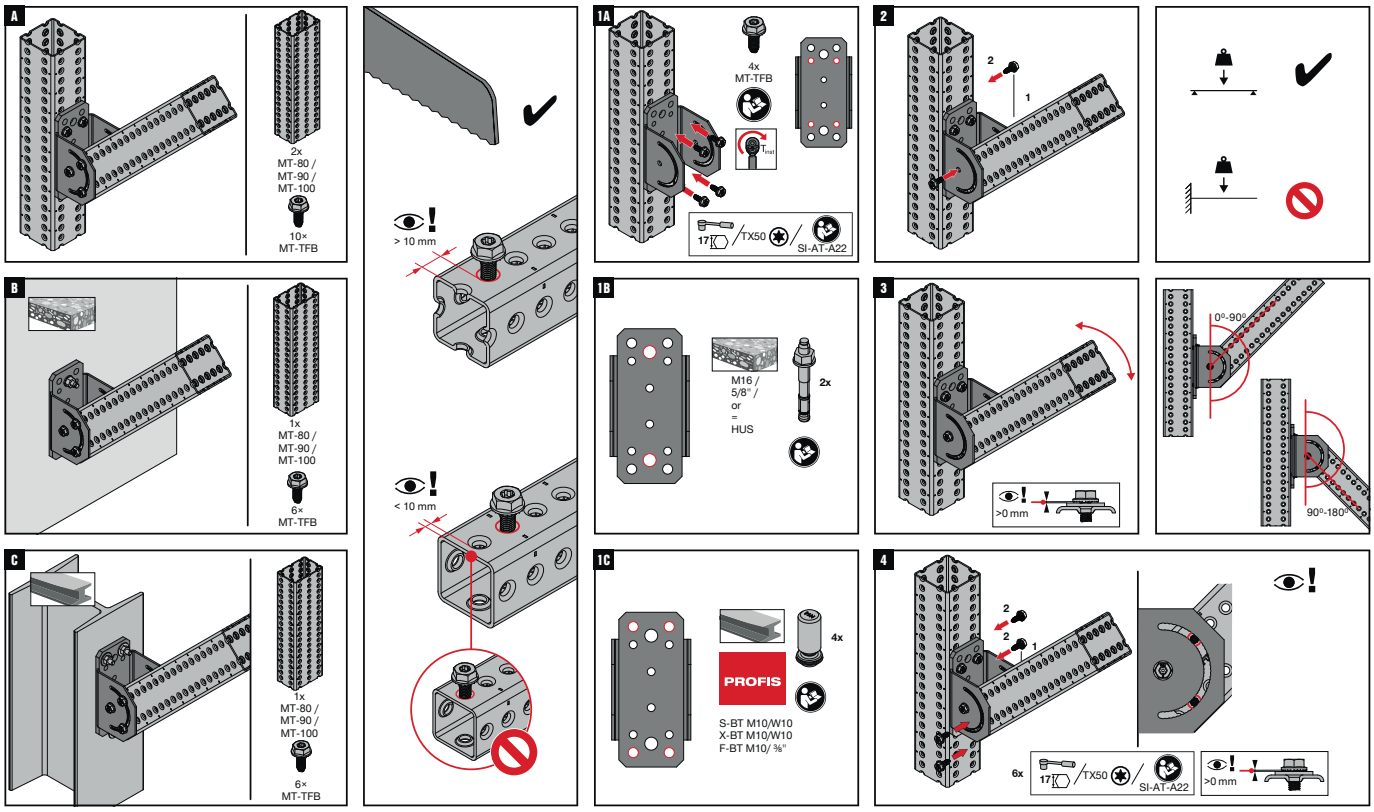


The latest IFU (Instruction For Use) is available on Hilti Online. Please check for any revisions before installing the product.

MT-B-G WS NC

2294693-07.2020

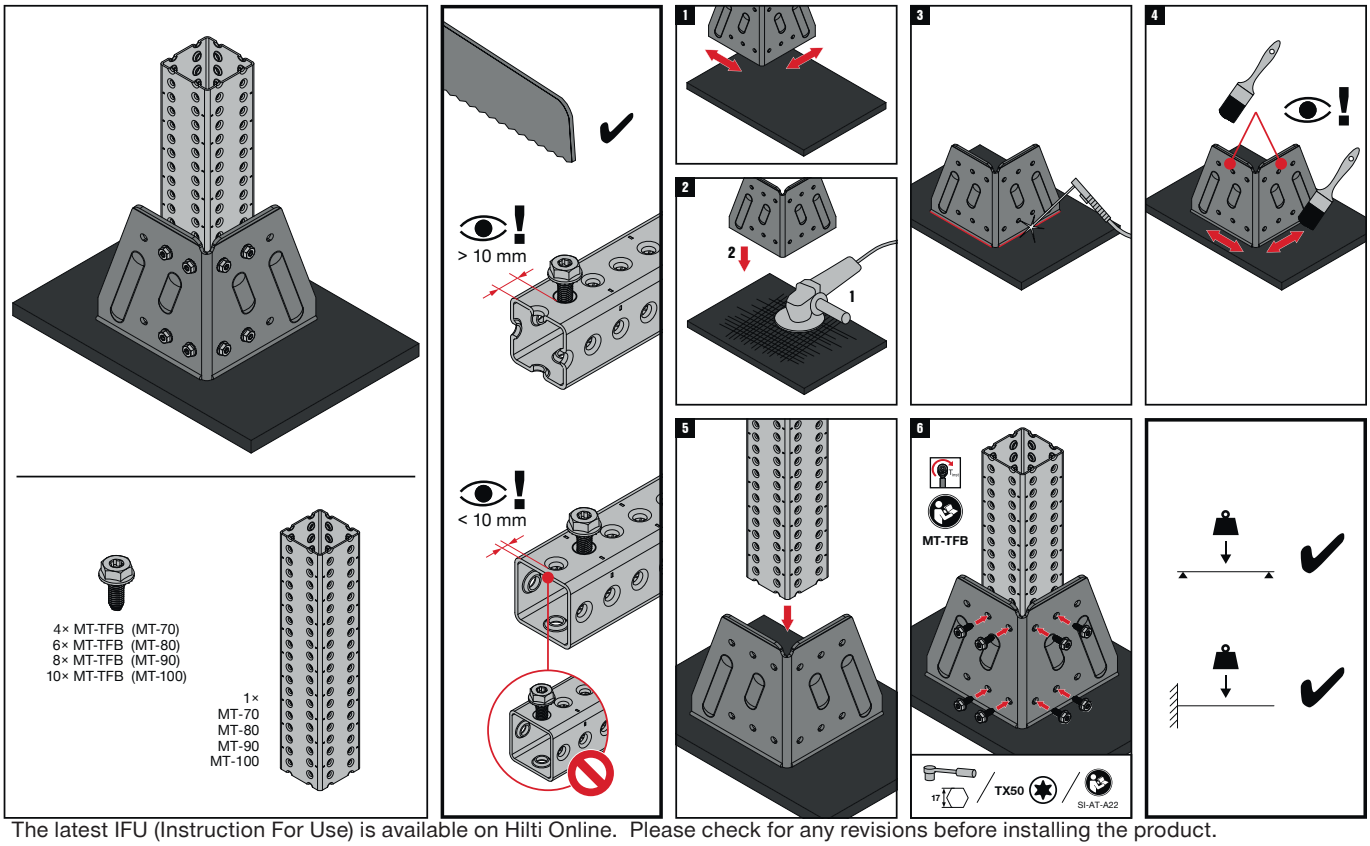


The latest IFU (Instruction For Use) is available on Hilti Online. Please check for any revisions before installing the product.

# MT Closed Profiles Base Material Connectors

Angle Connector - Outdoor

## Operation Instruction

MT-B-G AS OC

2334552-07.2020

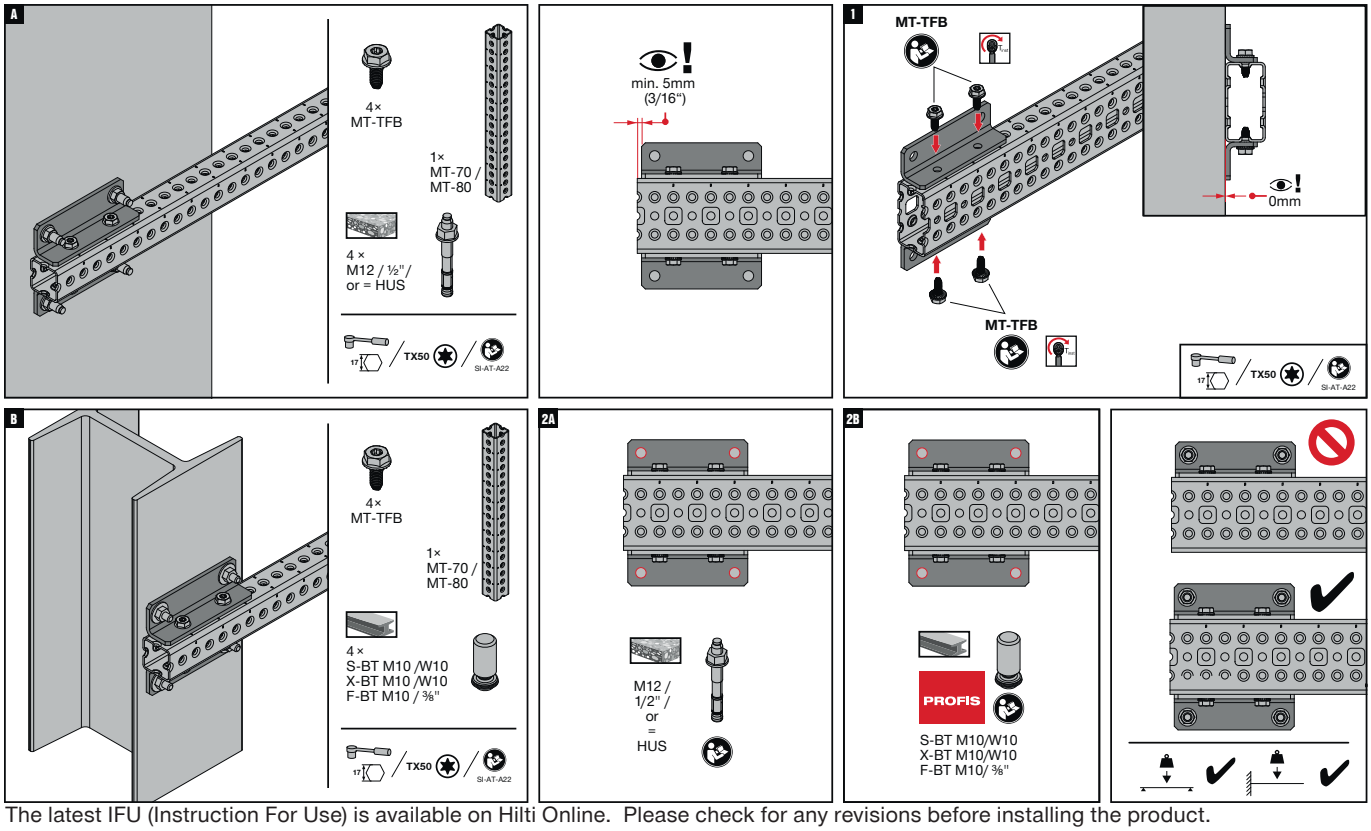


The latest IFU (Instruction For Use) is available on Hilti Online. Please check for any revisions before installing the product.

5

# MT Closed Profiles Base Material Connectors

## Sandwich Plate - Outdoor

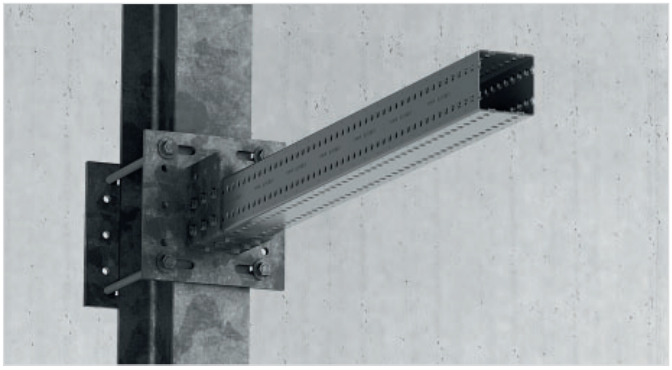

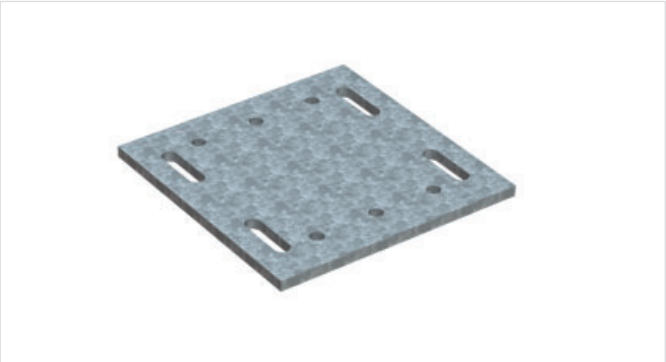

## Applications

- Assembling a sandwich clamp around structural steel for fastening MT baseplates (threaded rod required)
- Suitable for use in moderately corrosive environments

## Technical data

| | |
|---|---|
| **Material composition** | Q355 or better steel |
| **Surface finish** | Outdoor Coated - HDG |

## Advantages

- Part of the Hilti MT system – an economical, all-in-one solution for virtually all modular MEP support structures
- Easy to install – four slotted anchor holes to simplify positioning
- No drilling, welding or anchoring required – clamp modular baseplates around a steel beam without fastening directly to it

### MT-P-GXL S1 OC Sandwich Plate - Outdoor

| Order Designation | Thickness | Weight | Technical data | Sales pack quantity | Item number | |
|---|---|---|---|---|---|---|
| **MT-P-GXL S1 OC** | 15 mm | 6902 g | Outdoor, low to moderate pollution (C3 / C4 - low) | 2 pc | **2272110** | 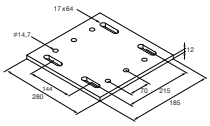 |

# MT Closed Profiles Base Material Connectors

## Modular Base Plate - Outdoor

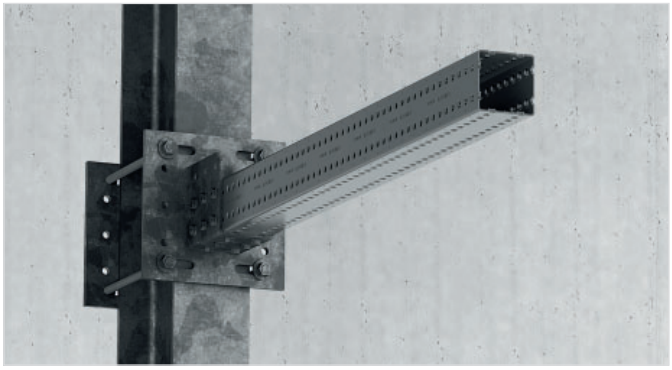

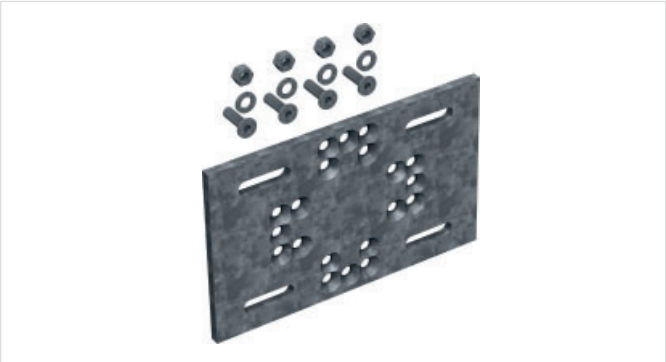

## Applications

- Attaching triangular bracing and grid baseplates to structural steel without the need for direct fastening
- Bracing connections to steel, closed profile cantilevers with MT-70/80 to steel and back plates for sandwich connections

## Advantages

- Part of the Hilti MT system – an economical, all-in-one solution for virtually all modular MEP support structures
- Lighter MEP support structures – save weight compared with MI and welded solutions
- Compatible with the Hilti Adaptive Torque system – use a cordless impact wrench to tighten nuts to the correct pretension more economically (compatible tool and SI-AT module required)

## Technical data

| | |
|---|---|
| **Material composition** | Q355 or better steel |
| **Surface finish** | Outdoor Coated - HDG |

## MT-P-G S1 / S2 / S3 OC Modular Base Plate - Outdoor

| Order Designation | Thickness | Weight | Technical data | Sales pack quantity | Item number | |
|---|---|---|---|---|---|---|
| **MT-P-G S1 OC** | 12 mm | 3368g | Outdoor, low to moderate pollution (C3 / C4 - low) | 1 baseplate, 4 bolts, 4 washers and 4 nuts | **2343199** | 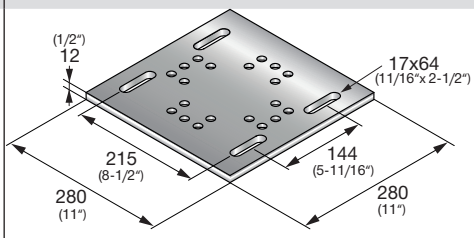  |
| **MT-P-G S2 OC** | 12 mm | 3302g | | 1 baseplate, 4 bolts, 4 washers and 4 nuts | **2343280** | 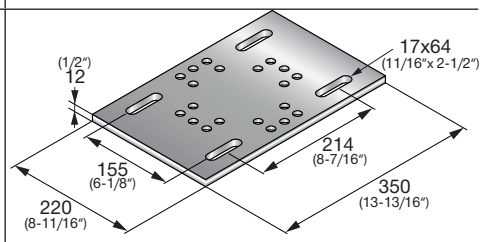  |
| **MT-P-G S3 OC** | 12 mm | 4131g | | 1 baseplate, 4 bolts, 4 washers and 4 nuts | **2343281** | 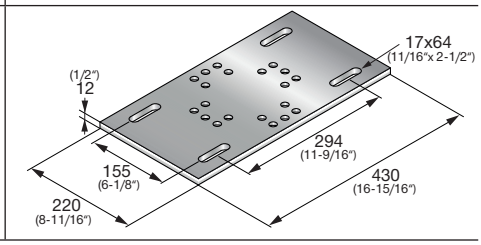  |

5

# MT Closed Profiles Base Material Connectors

## Modular Base Plate - Outdoor

### MT-P-GM S1 / S2 / S3 OC Modular Base Plate - Outdoor

| Order Designation | Thickness | Weight | Technical data | Sales pack quantity | Item number | |
|---|---|---|---|---|---|---|
| **MT-P-GM S1 OC set** | 12 mm | 6550g | Outdoor, low to moderate pollution (C3 / C4 - low) | 2 baseplates, 8 bolts, 8 washers and 8 nuts | **2345353** | 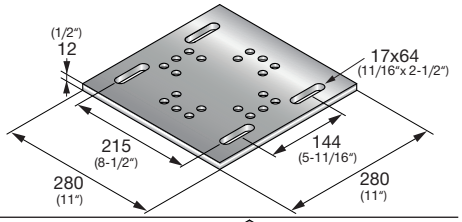  |
| **MT-P-GM S2 OC set** | 12 mm | 6450g | | 2 baseplates, 8 bolts, 8 washers and 8 nuts | **2345354** | 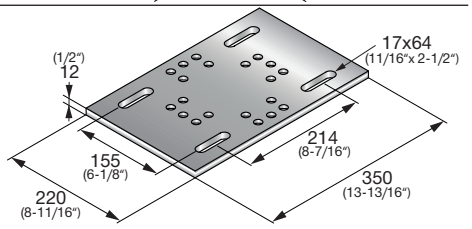  |
| **MT-P-GM S3 OC set** | 12 mm | 8100g | | 2 baseplates, 8 bolts, 8 washers and 8 nuts | **2345355** | 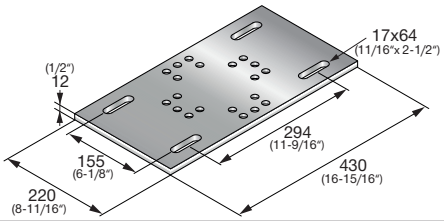  |

# MT Closed Profiles Base Material Connectors

## Connections To Steel - Outdoor

### Operation Instruction

MT-B-GXL S1 OC / MT-B-GXL S2 OC / MT-B-GXL S3 OC

2294692-09.2020

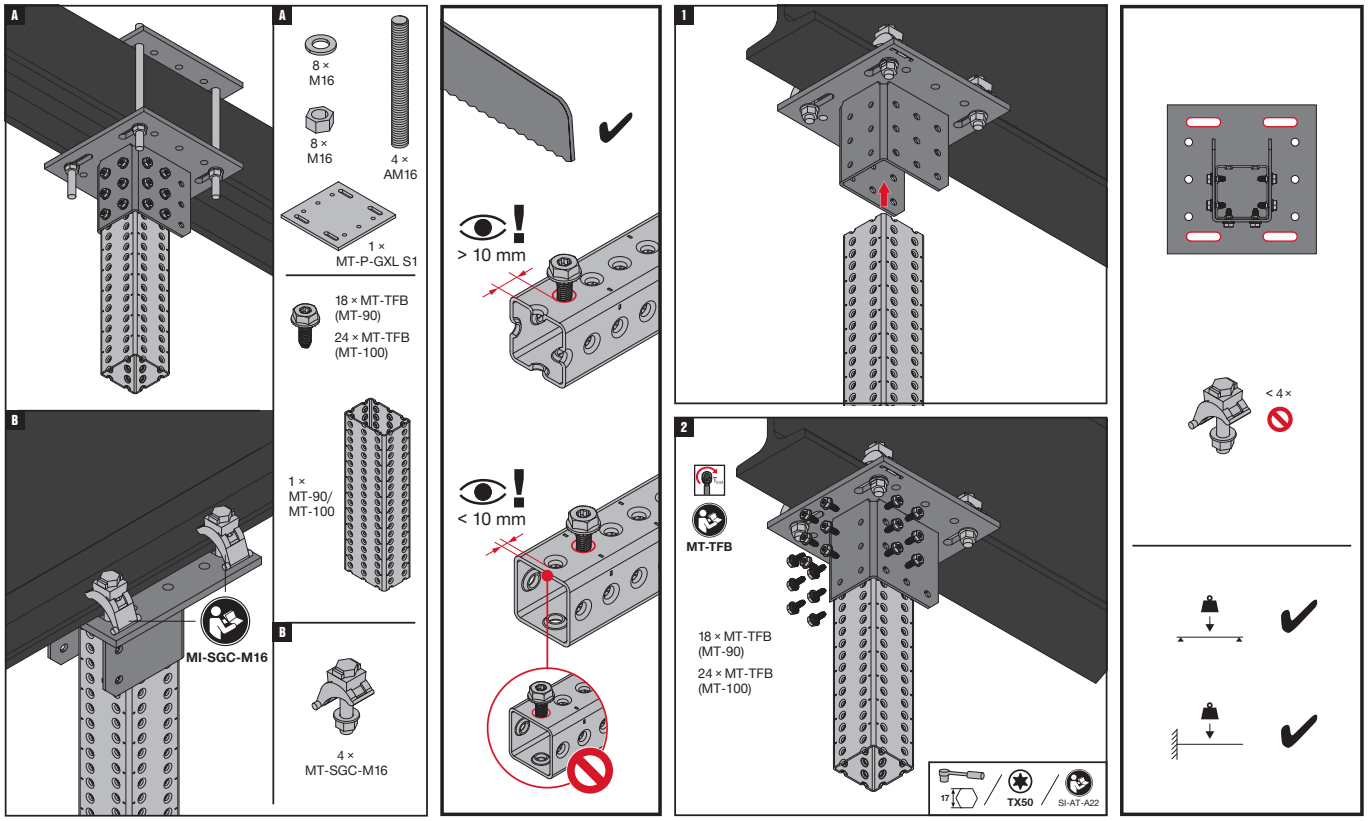


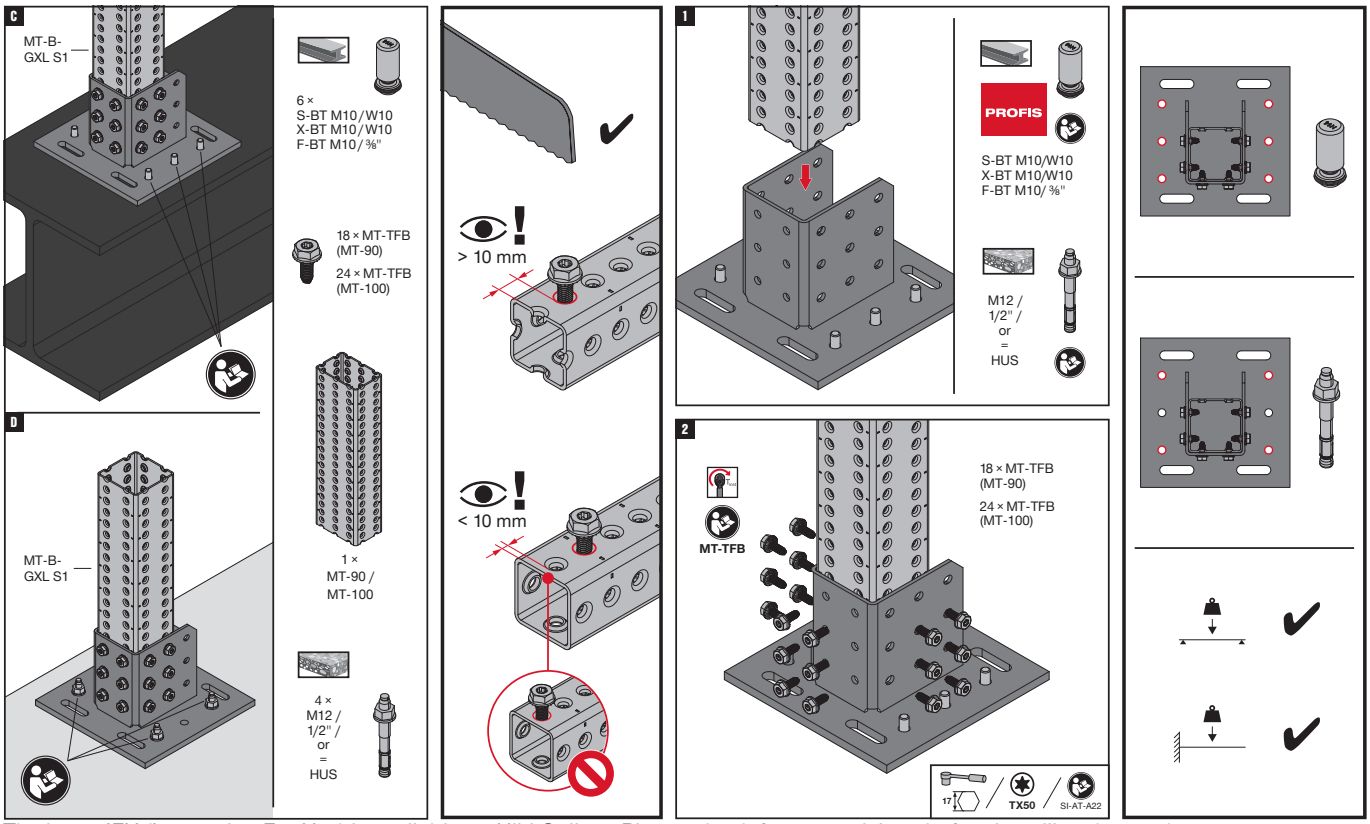


The latest IFU (Instruction For Use) is available on Hilti Online. Please check for any revisions before installing the product.

5

# MT Closed Profiles Base Material Connectors

## Connections To Steel - Outdoor

### Operation Instruction

MT-P-GM S1 OC + MT-P-G S1 OC / MT-P-GM S2 OC + MT-P-G S2 OC / MT-P-GM S3 OC + MT-P-G S3 OC

2347908-11.2021

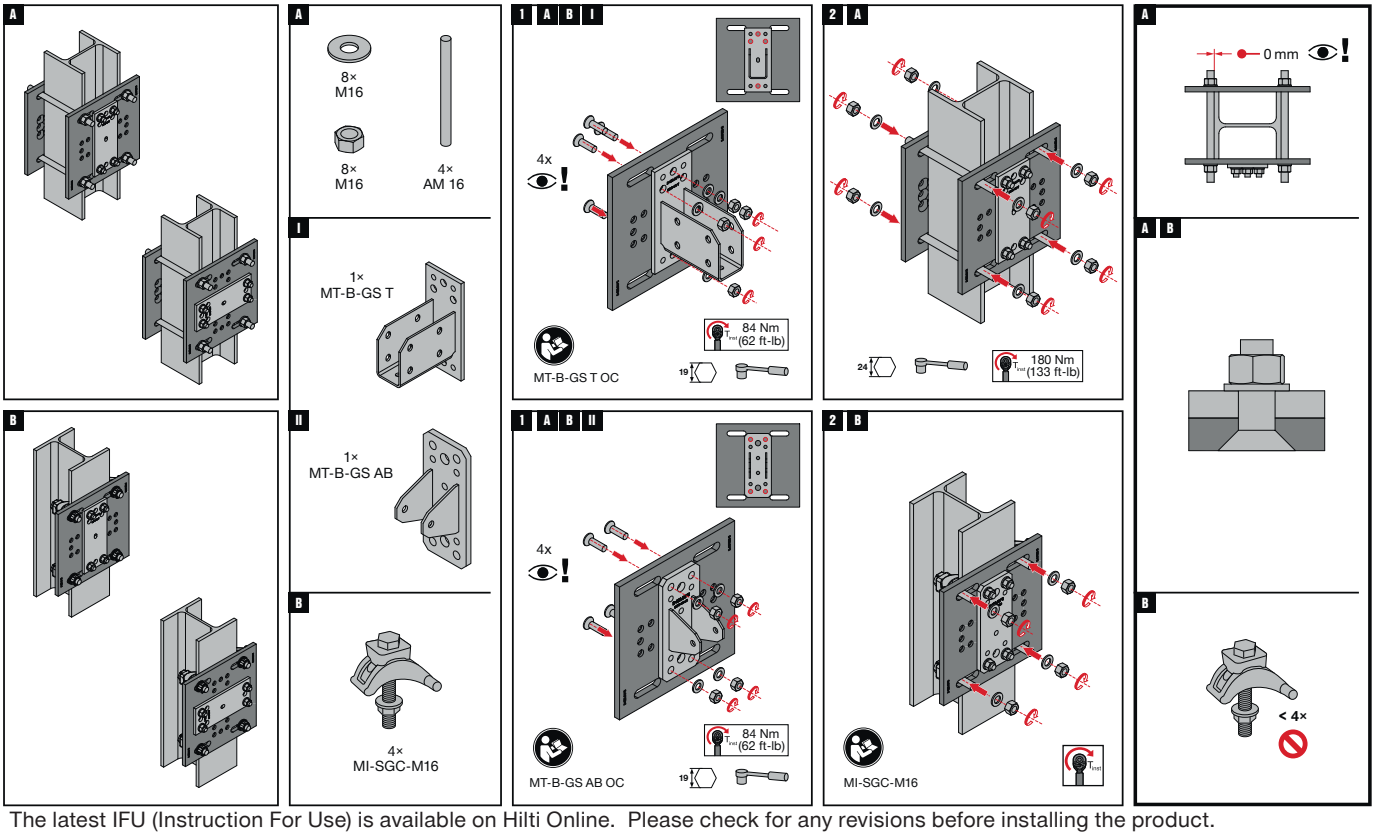


The latest IFU (Instruction For Use) is available on Hilti Online. Please check for any revisions before installing the product.

# MT Media Fixation For Open C-channels (Struts)

Threaded Fixation Plate

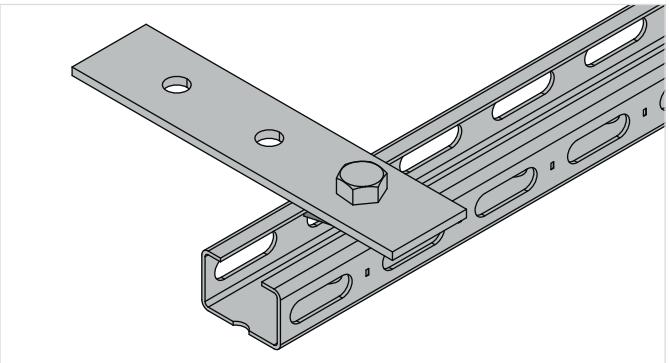

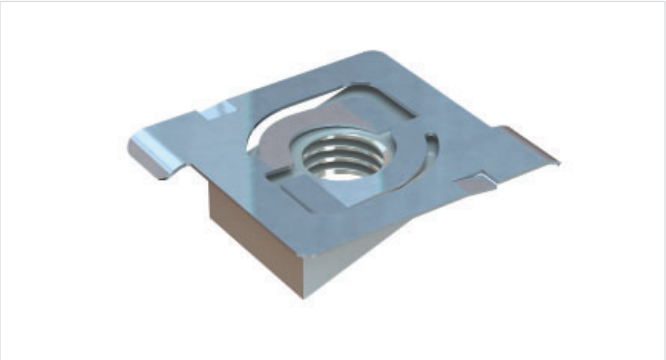

## Applications

- Attaching MEP media (hardware) to MT strut when no shear load resistance is required

## Advantages

- Part of the Hilti MT system – an economical, all-in-one solution for virtually all modular MEP support structures
- Simple media fixation method where no shear force resistance required
- Easy to install – insert into strut channel using a one-handed “push-and-twist” motion

## Technical data

| | |
|---|---|
| **Material composition** | Q235B or better steel |
| **Surface finish** | Pre-galvanized - for dry indoor use only |

## MT-FPT M8 / M10 / M12 Threaded Fixation Plate

| Order Designation | Technical data | Sales pack quantity | Item number | |
|---|---|---|---|---|
| **MT-FPT M8** | Dry indoor conditions (C1) Indoor with temporary condensation (C2) | 50 pc | **2281867** | 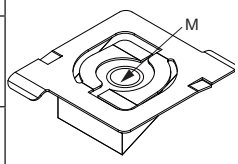  |
| **MT-FPT M10** | | 50 pc | **2282193** | |
| **MT-FPT M12** | | 50 pc | **2282195** | |

## MT Media Fixation For Open C-channels (Struts)

Threaded Fixation Plate - Outdoor

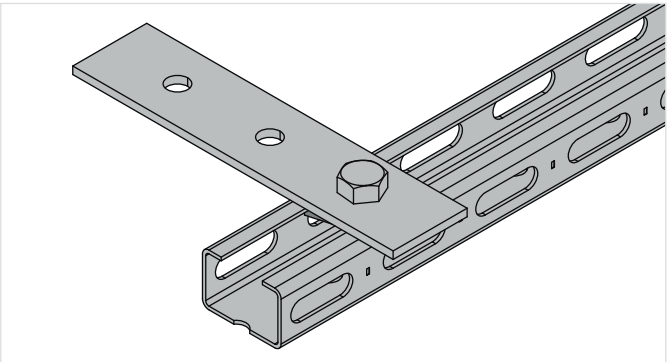

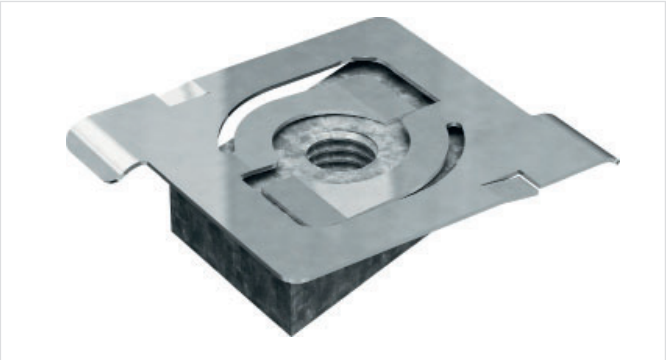

### Applications

- Attaching MEP media (hardware) to MT strut when no shear load resistance is required

### Technical data

| | |
|---|---|
| **Material composition** | Q235B or better |
| **Surface finish** | Hot-dip galvanized - for outdoor use |

### Advantages

- Part of the Hilti MT system – an economical, all-in-one solution for virtually all modular MEP support structures
- Simple media fixation method where no shear force resistance required
- Easy to install – insert into strut channel using a one-handed “push-and-twist” motion

### MT-FPT OC M8 / M10 / M12 OC Threaded Fixation Plate - Outdoor

| Order Designations | Technical data | Sales pack quantity | Item number | |
|---|---|---|---|---|
| **MT-FPT M8 OC** | Outdoor, low to moderate pollution (C3 / C4 - low) | 50 pc | **2282192** | 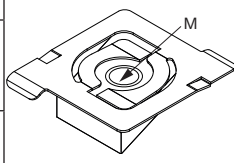  |
| **MT-FPT M10 OC** | | 50 pc | **2282194** | |
| **MT-FPT M12 OC** | | 50 pc | **2282196** | |

# MT Media Fixation For Open C-channels (Struts)

Threaded Fixation Plate

## Operation Instruction

MT-FPT / MT-FPT OC

2294627-07.2020

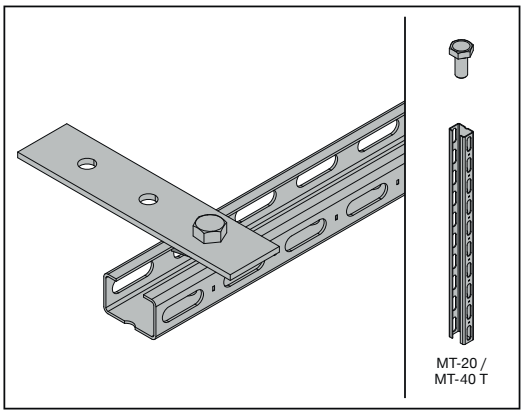


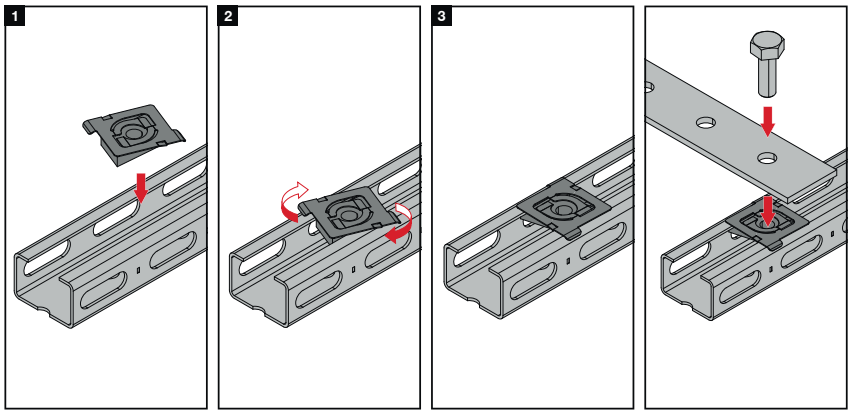


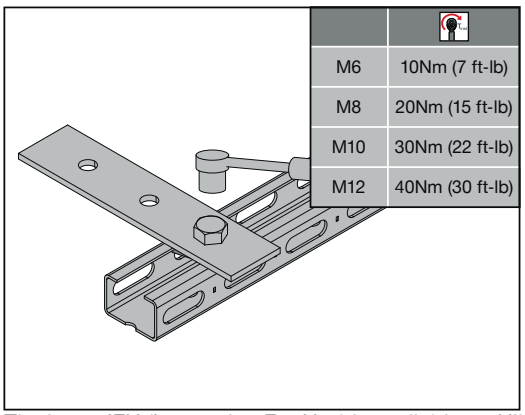

| | |
|---|---|
| M6 | 10Nm (7 ft-lb) |
| M8 | 20Nm (15 ft-lb) |
| M10 | 30Nm (22 ft-lb) |
| M12 | 40Nm (30 ft-lb) |

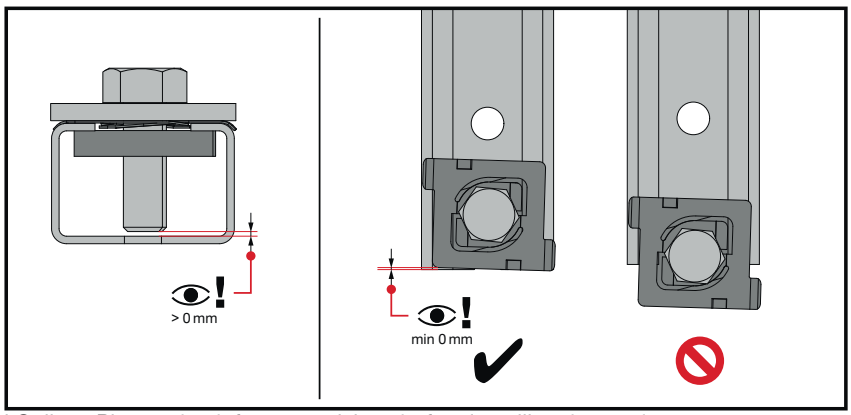


The latest IFU (Instruction For Use) is available on Hilti Online. Please check for any revisions before installing the product.

# MT Media Fixation For Open C-channels (Struts)

Threaded Fixation Plate

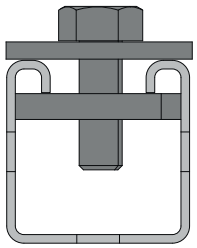


## Applications

- Attaching MEP media (hardware) to MT strut when no shear load resistance is required
- Suitable for use in dry, indoor environments

## Advantages

- Part of the Hilti MT system – an economical, all-in-one solution for virtually all modular MEP support structures
- Simple media fixation method where no shear force resistance required

## Technical data

| | |
|---|---|
| **Material composition** | Q235B or better steel |
| **Surface finish** | Pre-galvanized - for dry indoor use only |

## MT-FP M6 / M8 / M10 / M12 / M16 Threaded Fixation Plate

| Order Designation | Technical data | Sales pack quantity | Item number | |
|---|---|---|---|---|
| **MT-FP M6** | Dry indoor conditions (C1) Indoor with temporary condensation (C2) | 100 pc | **2273653** | 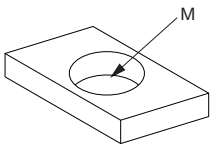  |
| **MT-FP M8** | | 100 pc | **2273655** | |
| **MT-FP M10** | | 100 pc | **2273657** | |
| **MT-FP M12** | | 100 pc | **2273659** | |
| **MT-FP M16** | | 100 pc | **2273671** | |

# MT Media Fixation For Open C-channels (Struts)

Threaded Fixation Plate - Outdoor

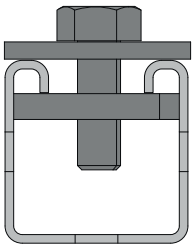

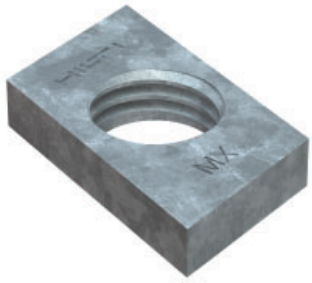

## Applications

- Attaching MEP media (hardware) to MT strut when no shear load resistance is required
- Suitable for use in moderately corrosive environments

## Advantages

- Part of the Hilti MT system – an economical, all-in-one solution for virtually all modular MEP support structures
- Simple media fixation method where no shear force resistance required
- Corrosion resistance – hot-dip galvanized to help protect against moisture and chemical corrosion

## Technical data

| | |
|---|---|
| **Material composition** | Q235B or better steel |
| **Surface finish** | Hot-dip galvanized - for outdoor use |

## Threaded Fixation Plate - Outdoor

| Item designation | Technical data | Sales pack quantity | Item number | |
|---|---|---|---|---|
| **MT-FP M6 OC** | Outdoor, low to moderate pollution (C3 / C4 - low) | 100 pc | **2273654** | 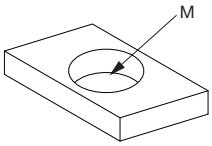  |
| **MT-FP M8 OC** | | 100 pc | **2273656** | |
| **MT-FP M10 OC** | | 100 pc | **2273658** | |
| **MT-FP M12 OC** | | 100 pc | **2273670** | |
| **MT-FP M16 OC** | | 100 pc | **2273672** | |

6

# MT Media Fixation For Open C-channels (Struts)

Threaded Fixation Plate

## Operation Instruction

MT-FP / MT-FP OC

2298189-07.2020

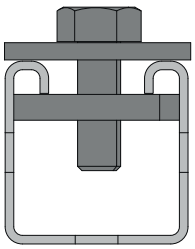

| size | Torque (Nm) |
|---|---|
| M6 | 5 |
| M8 | 9 |
| M10 | 15 |
| M12 | 20 |
| M16 | 20 |

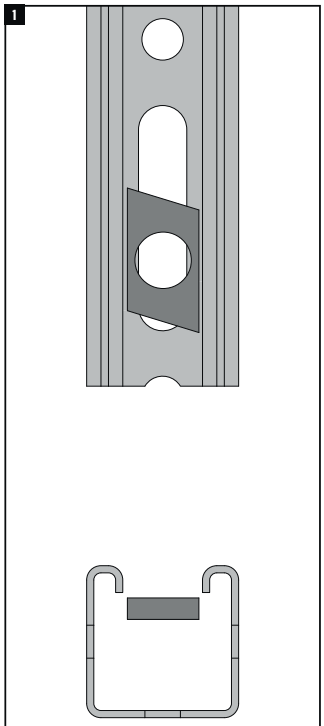


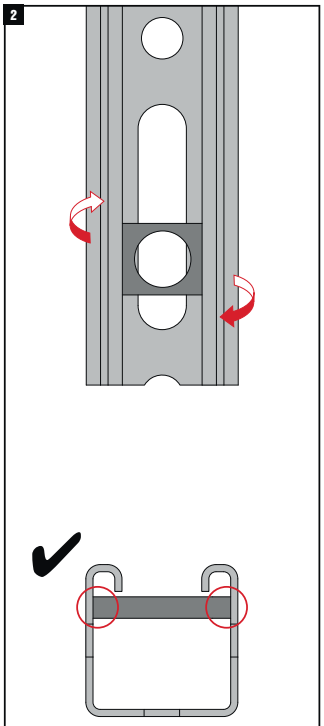


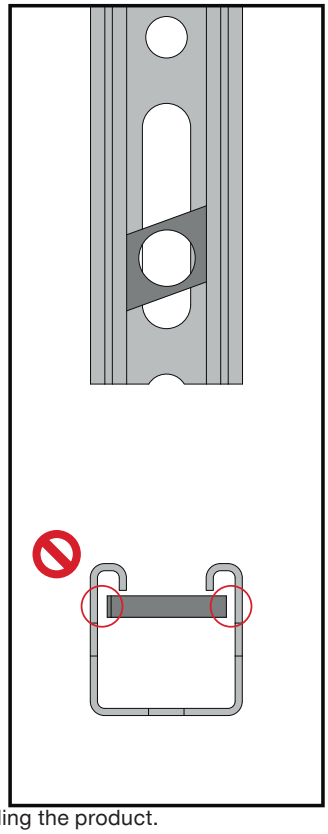

The latest IFU (Instruction For Use) is available on Hilti Online. Please check for any revisions before installing the product.

# MT Media Fixation For Open C-channels (Struts)

Washer - Outdoor

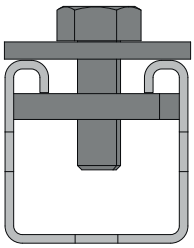

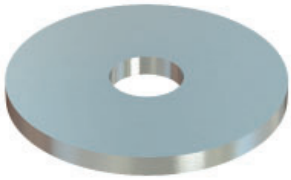

## Applications

- Assembling strut trapeze for piping supports

## Advantages

- Part of the Hilti MT system – an economical, all-in-one solution for virtually all modular MEP support structures
- Versatile solution for fastening pipe rings to the open face of MT strut channels using MT-FP threaded plates

## Technical data

| | |
|---|---|
| **Material composition** | Q235 or better steel |
| **Surface finish** | Outdoor Coated - HDG |

## MT-ZW M8 / M10 / M12 / M16 OC Washer - Outdoor

| Order Designation | Weight | Technical data | Sales pack quantity | Item number | |
|---|---|---|---|---|---|
| **MT-ZW M8 OC** | 2 g | Outdoor, low to moderate pollution (C3 / C4 - low) | 100 pc | **2283114** | 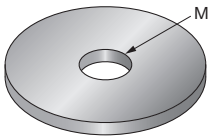  |
| **MT-ZW M10 OC** | 4 g | | 100 pc | **2283115** | |
| **MT-ZW M12 OC** | 6 g | | 100 pc | **2283116** | |
| **MT-ZW M16 OC** | 11 g | | 100 pc | **2283117** | |

# MT Media Fixation For Open C-channels (Struts)

U-bolt Fixation Angle

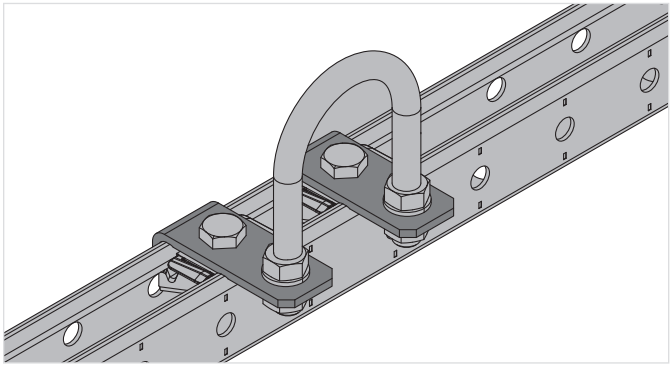

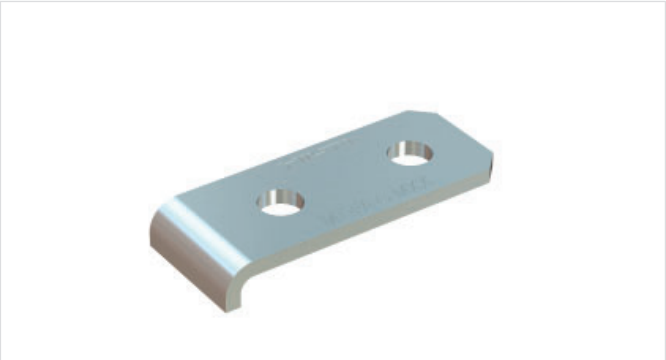

## Applications

- Attaching MEP media to MT strut channels
- Suitable for use in dry, indoor environments

## Advantages

- Part of the Hilti MT system – an economical, all-in-one solution for virtually all modular MEP support structures
- Easy to install – compatible with the Hilti MT Twist-Lock, a faster alternative to spring nuts for assembling a modular support system
- Simple media fixation method

## Technical data

| | |
|---|---|
| **Material composition** | Q235B or better steel |
| **Surface finish** | Pre-galvanized - for dry indoor use only |

## MT-FA-C M8 / M10 / M12 / M16 U-bolt Fixation Angle

| Order designations | Technical data | Sales pack quantity | Item number | |
|---|---|---|---|---|
| **MT-FA-C M8** | Dry indoor conditions (C1) Indoor with temporary condensation (C2) | 20 pc | **2273686** | 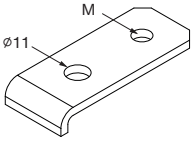  |
| **MT-FA-C M10** | | 20 pc | **2273688** | |
| **MT-FA-C M12** | | 20 pc | **2273690** | |
| **MT-FA-C M16** | | 20 pc | **2273692** | |

# MT Media Fixation For Open C-channels (Struts)

U-bolt Fixation Angle - Outdoor

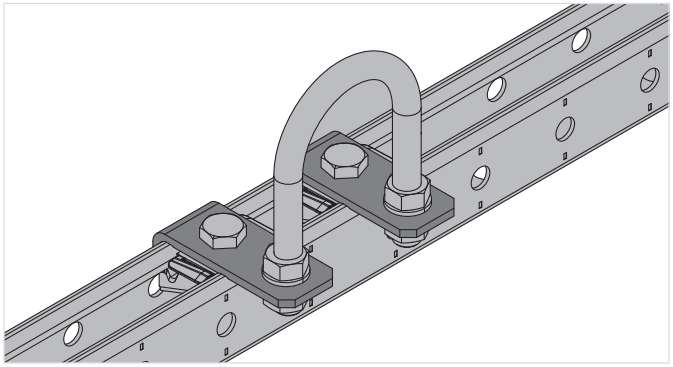


## Applications

- Attaching MEP media to MT strut channels
- Suitable for use in moderately corrosive environments

## Technical data

| | |
|---|---|
| **Material composition** | Q355B or better steel |
| **Surface finish** | Hot-dip galvanized - for outdoor use |

## Advantages

- Part of the Hilti MT system – an economical, all-in-one solution for virtually all modular MEP support structures
- Easy to install – compatible with the Hilti MT Twist-Lock, a faster alternative to spring nuts for assembling a modular support system
- Simple media fixation method

## MT-FA-C OC U-bolt Fixation Angle

| Order designation | Technical data | Sales pack quantity | Item number | |
|---|---|---|---|---|
| **MT-FA-C M8 OC** | Outdoor, low to moderate pollution (C3 / C4 - low) | 20 pc | **2273687** | 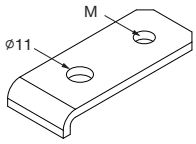  |
| **MT-FA-C M10 OC** | | 20 pc | **2273689** | |
| **MT-FA-C M12 OC** | | 20 pc | **2273691** | |
| **MT-FA-C M16 OC** | | 20 pc | **2273652** | |

6

# MT Media Fixation For Open C-channels (Struts)

U-bolt Fixation Angle

## Operation Instruction

MT-FA-C M8/M10/M12/M16 / MT-FA-C M8/M10/M12/M16 OC

2294628-07.2020

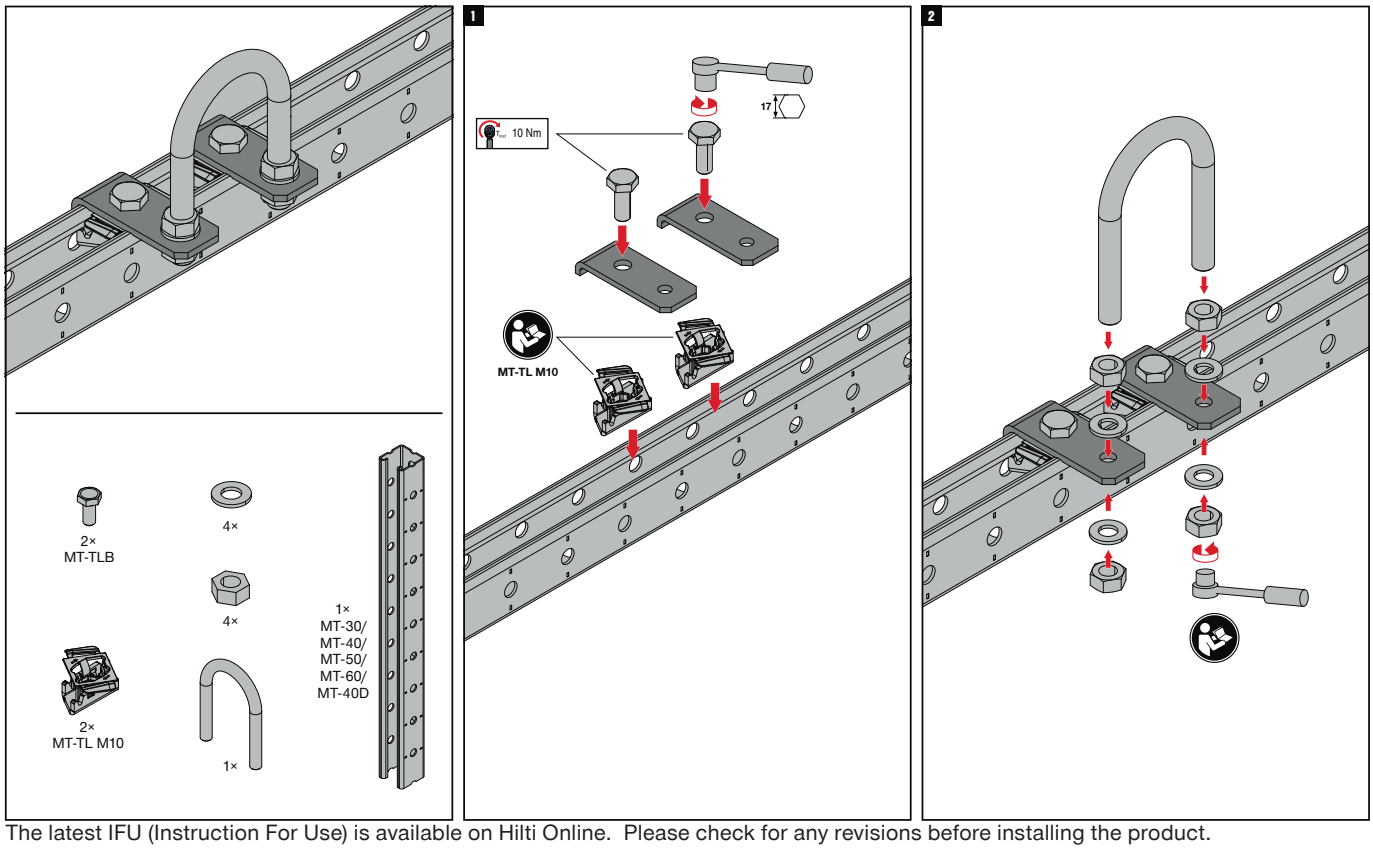


The latest IFU (Instruction For Use) is available on Hilti Online. Please check for any revisions before installing the product.

# MT Media Fixation For Closed Profiles

U-bolt Fixation Angle - Outdoor

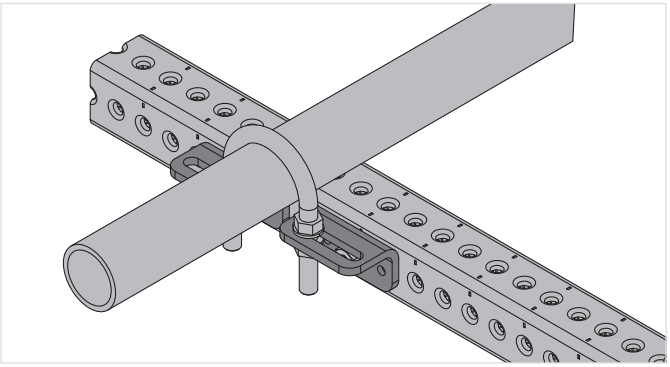

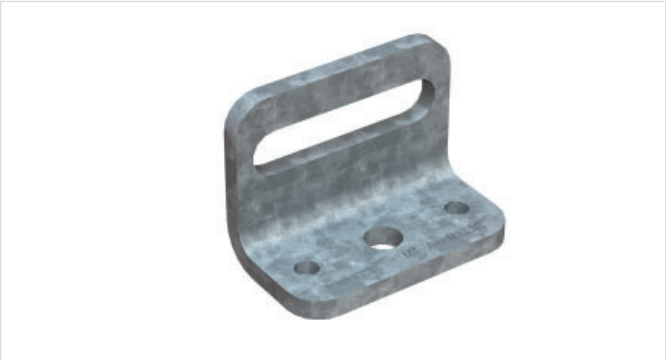

## Applications

- Attaching MEP media to MT closed profiles
- Suitable for use in moderately corrosive environments

## Advantages

- Part of the Hilti MT system – an economical, all-in-one solution for virtually all modular MEP support structures
- Easy to install – one-step fastening using Hilti MT-TFB thread-forming bolts
- Simple media fixation method

## Technical data

| | |
|---|---|
| **Material composition** | Q235B or better steel |
| **Surface finish** | Hot-dip galvanized - for outdoor use |

## MT-FA-G OC Closed Profile U-bolt Fixation Angle - Outdoor

| Order Designation | Technical data | Sales pack quantity | Item number | |
|---|---|---|---|---|
| **MT-FA-G M10 3/8 OC** | Outdoor, low to moderate pollution (C3 / C4 - low) | 10 pc | **2273681** | 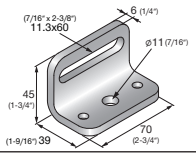  |
| **MT-FA-G M12 1/2 OC** | | 10 pc | **2273682** | 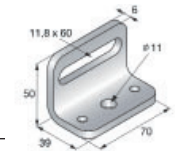  |
| **MT-FA-G M16 5/8 OC** | | 10 pc | **2273683** | 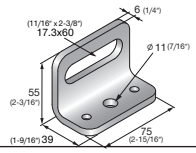  |
| **MT-FA-G M22 7/8 OC** | | 10 pc | **2273684** | 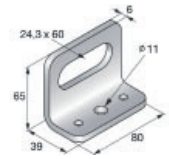  |
| **MT-FA-G M24 1 OC** | | 10 pc | **2273685** | 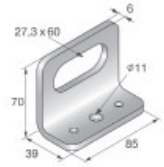  |

6

# MT Media Fixation For Closed Profiles

U-bolt Fixation Angle - Outdoor

## Operation Instruction

MT-FA-G OC

2294698-07.2020

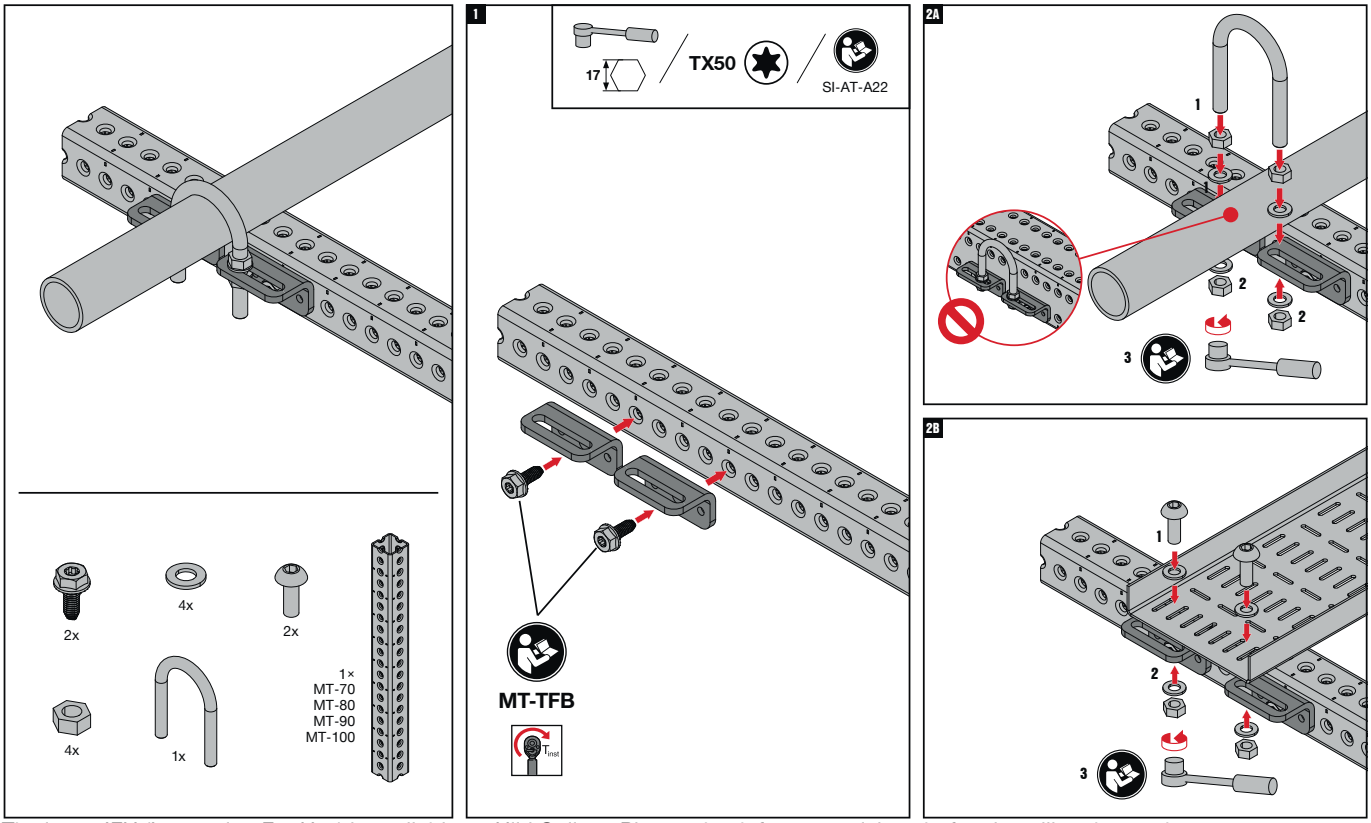


The latest IFU (Instruction For Use) is available on Hilti Online. Please check for any revisions before installing the product.

# MT Media Fixation For Closed Profiles

## Sliding Axial Guide Pipe Shoe Fixation - Outdoor

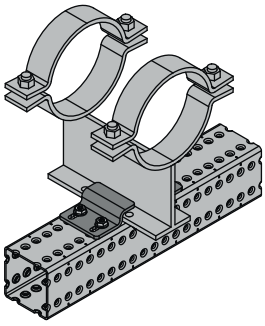

## Applications

- Fastening MP-PS pipe shoes to MT closed profiles restricting the movement to an axial sliding
- Recommended for use in Indoor or Outdoor with low to moderate pollution (C3)

## Advantages

- Easier to install – slotted anchor holes to simplify pipe shoe positioning and fastening
- Adaptable – suitable for any size and configuration of Hilti MP pipe shoe
- Safer jobsites – avoid welding and drilling

## Technical data

| | |
|---|---|
| **Material composition** | S280GD+ZM300 |
| **Surface finish** | Outdoor Coated - ZM |

### MT-FPS-SF / SZ1 / SZ2 OC Sliding Axial Guide Pipe Shoe Fixation - Outdoor

| Order Designation | Weight | Technical data | Sales pack quantity | Item number | |
|---|---|---|---|---|---|
| **MT-FPS-SF OC** | 0,27 kg | Outdoor, low to moderate pollution (C3 / C4 - low) | 8 pc | **2330920** | 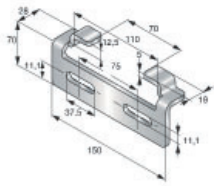 |
| **MT-FPS-SZ1 OC** | 0,18 kg | | 12 pc | **2331078** | 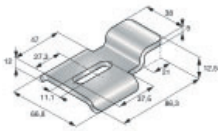 |
| **MT-FPS-SZ2 OC** | 0,26 kg | | 10 pc | **2331079** | 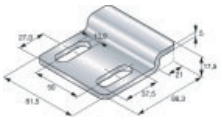 |

6

# MT Media Fixation For Closed Profiles

## Sliding Axial Guide Pipe Shoe Fixation - Outdoor

### Operation Instruction

MT-FPS-GS OC / MT-FPS-GL OC

2334620-03.2022

**1**

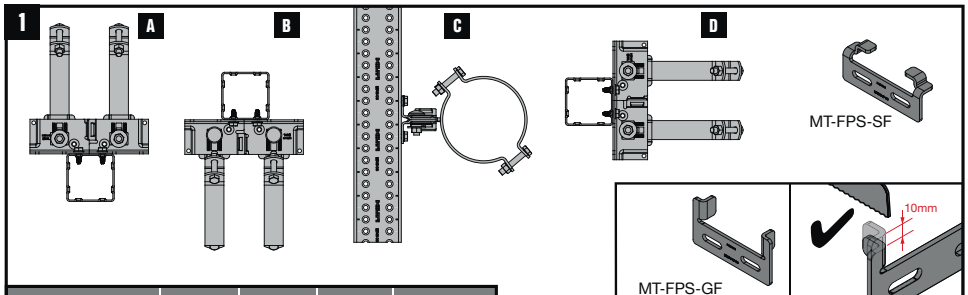


| | MT-TFB | MT-TFB | MT-TFB | MT-TLB |
|---|---|---|---|---|
| | MT-70 / MT-80 S | MT-80 / MT-90 | MT-100 | MT-U-GL1 |
| MT-FPS-SF | A-D | A-D | A-D* | A |
| MT-FPS-GF | A | A | A* | A |

*without 1-1

| | MT-FPS-GF OC | |
|---|---|---|
| MP-PS 1-1 | ok | ok |
| MP-PS 2-2 | ok | ok |
| MP-PS L4-2 | - | ok |
| MP-PS M4-2 | - | ok |
| MP-PS H4-2 | ok | ok |

**2A**

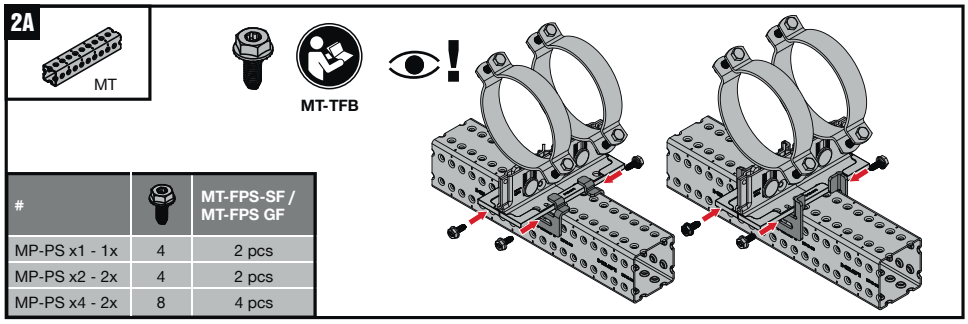


| # | | MT-FPS-SF / MT-FPS GF |
|---|---|---|
| MP-PS x1 - 1x | 4 | 2 pcs |
| MP-PS x2 - 2x | 4 | 2 pcs |
| MP-PS x4 - 2x | 8 | 4 pcs |

**2B**

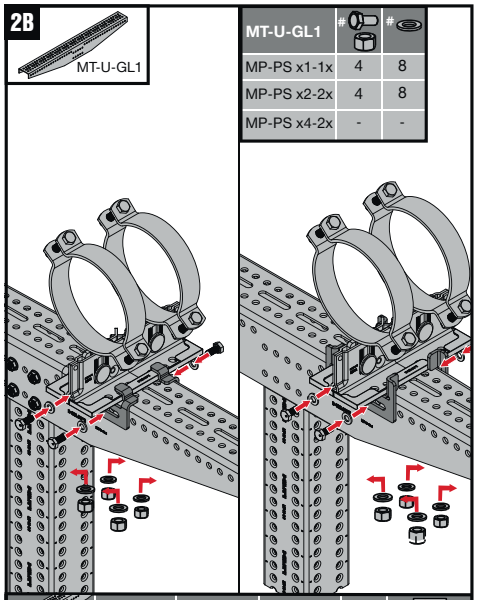


| MT-U-GL1 | # | # |
|---|---|---|
| MP-PS x1-1x | 4 | 8 |
| MP-PS x2-2x | 4 | 8 |
| MP-PS x4-2x | - | - |

| | | | | | |
|---|---|---|---|---|---|
| MT-U-GL1 | MT-TLB OC | M10-SL OC | A 10.5/20-F | 17 | 20 Nm (14.75 ft-lb) |
| | M10x25-F | M10-F | A 10.5/20-F | 17 | 20 Nm (14.75 ft-lb) |

**3**

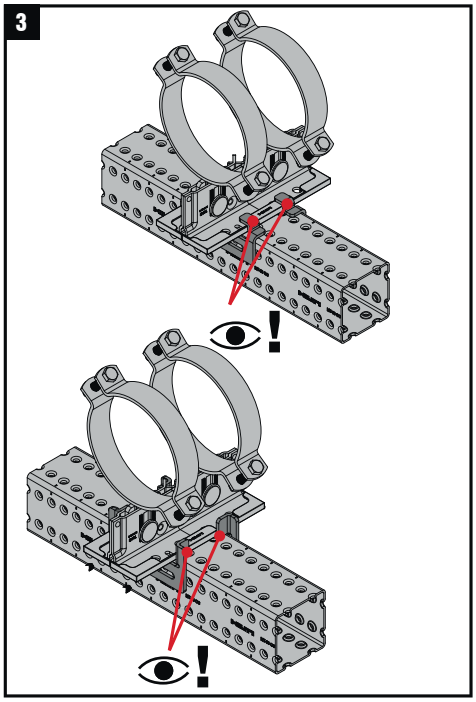

**4**

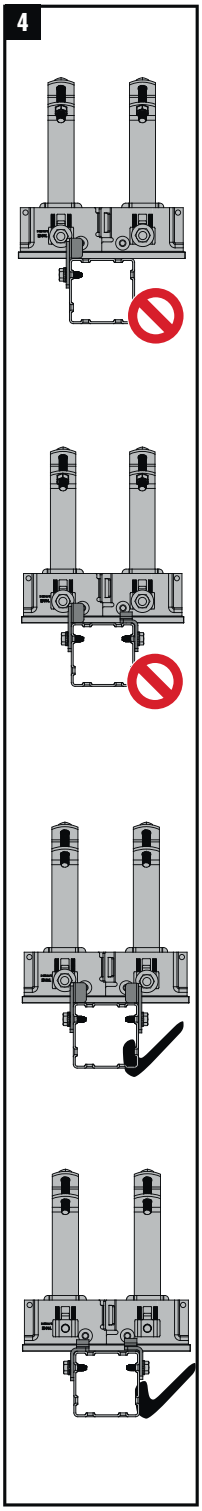

The latest IFU (Instruction For Use) is available on Hilti Online. Please check for any revisions before installing the product.

# MT Media Fixation For Closed Profiles

## Plain Guide Allowing Uplift Pipe Shoe Fixation - Outdoor

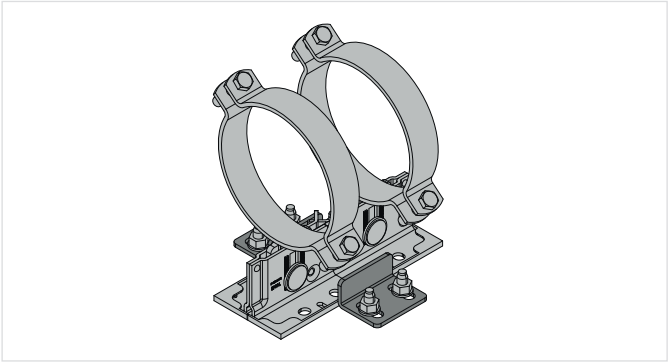

## Applications

- Fastening MP-PS pipe shoes to MT closed profiles restricting the movement to axial sliding and vertical lifting
- Recommended for use in Indoor or Outdoor with low to moderate pollution (C3)

## Advantages

- Easier to install – slotted anchor holes to simplify pipe shoe positioning and fastening
- Adaptable – suitable for any size of Hilti MP pipe shoe in stand-up configuration
- Safer jobsites – avoid welding and drilling

## Technical data

| | |
|---|---|
| **Material composition** | S280GD+ZM300 |
| **Surface finish** | Outdoor Coated - ZM |

### MT-FPS-GF / GL1 / GL2 OC Plain Guide Allowing Uplift Pipe Shoe Fixation - Outdoor

| Order Designation | Weight | Technical data | Sales pack quantity | Item number | |
|---|---|---|---|---|---|
| **MT-FPS-GF OC** | 0,30 kg | Outdoor, low to moderate pollution (C3 / C4 - low) | 8 pc | **2330921** | 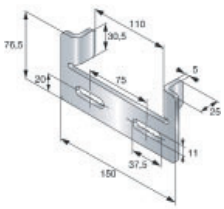 |
| **MT-FPS-GL1 OC** | 0,18 kg | | 12 pc | **2331080** | 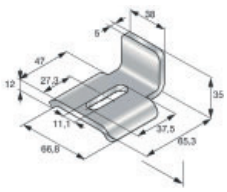 |
| **MT-FPS-GL2 OC** | 0,26 kg | | 10 pc | **2331081** | 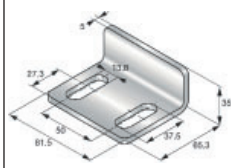 |

6

# MT Media Fixation For Closed Profiles

## Plain Guide Allowing Uplift Pipe Shoe Fixation - Outdoor

### Operation Instruction

MT-FPS SZx OC SET / MT-FPS GLx OC SET

2334219-08.2021

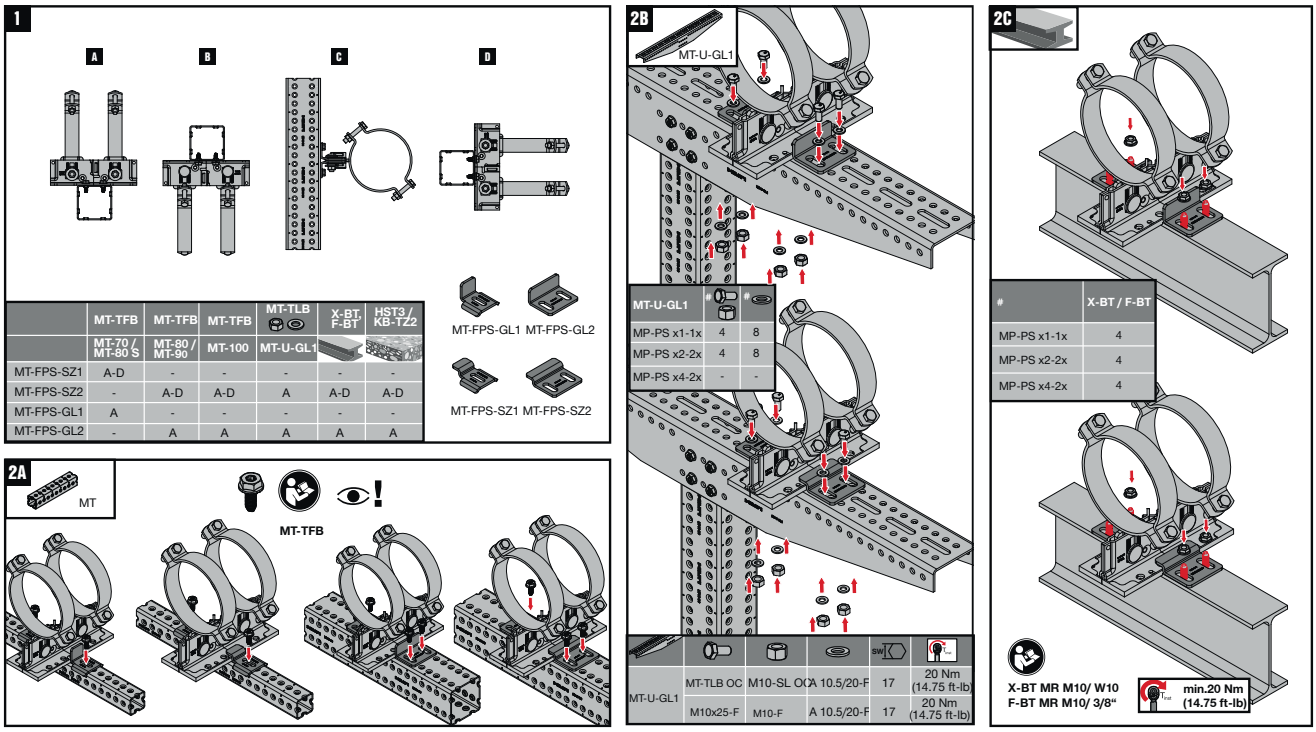


| | MT-TFB | MT-TFB | MT-TFB | MT-TLB | X-BT, F-BT | HST3 / KB-TZ2 |
|---|---|---|---|---|---|---|
| | MT-70 / MT-80 S | MT-80 / MT-90 | MT-100 | MT-U-GL1 | | |
| MT-FPS-SZ1 | A-D | - | - | - | - | - |
| MT-FPS-SZ2 | - | A-D | A-D | A | A-D | A-D |
| MT-FPS-GL1 | A | - | - | - | - | - |
| MT-FPS-GL2 | - | A | A | A | A | A |

2334219-08.2021

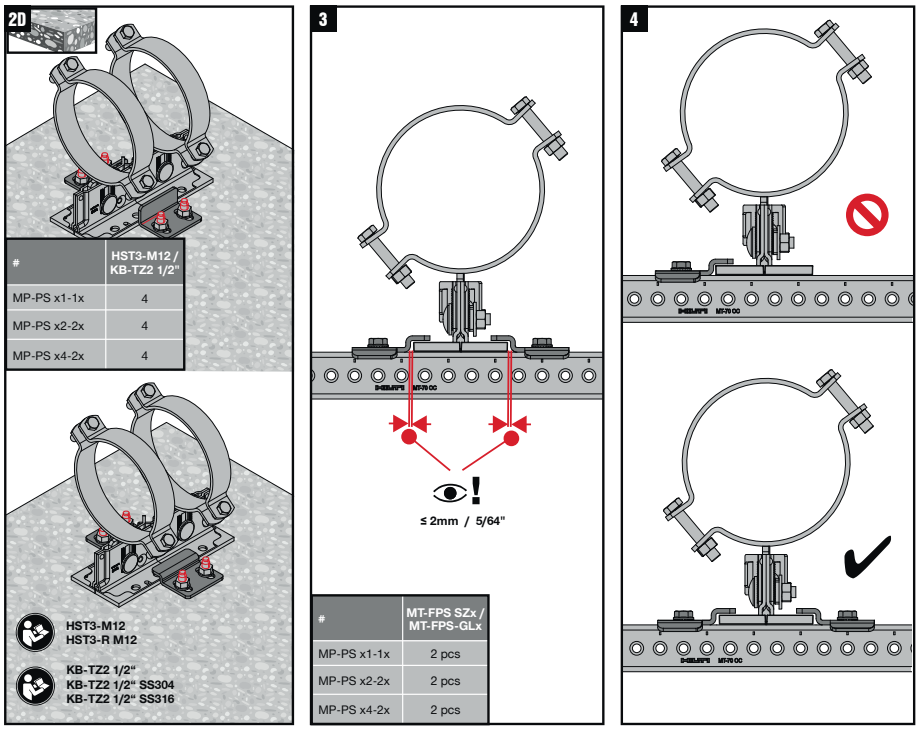


| # | HST3-M12 / KB-TZ2 1/2" |
|---|---|
| MP-PS x1-1x | 4 |
| MP-PS x2-2x | 4 |
| MP-PS x4-2x | 4 |

| # | MT-FPS SZx / MT-FPS-GLx |
|---|---|
| MP-PS x1-1x | 2 pcs |
| MP-PS x2-2x | 2 pcs |
| MP-PS x4-2x | 2 pcs |

The latest IFU (Instruction For Use) is available on Hilti Online. Please check for any revisions before installing the product.

# MT Media Fixation For Closed Profiles

## Plain Guide Allowing Uplift Pipe Shoe Fixation - Outdoor

### Operation Instruction

MT-FPS SF OC SET / MT-FPS GF OC SET

2334620-03.2022

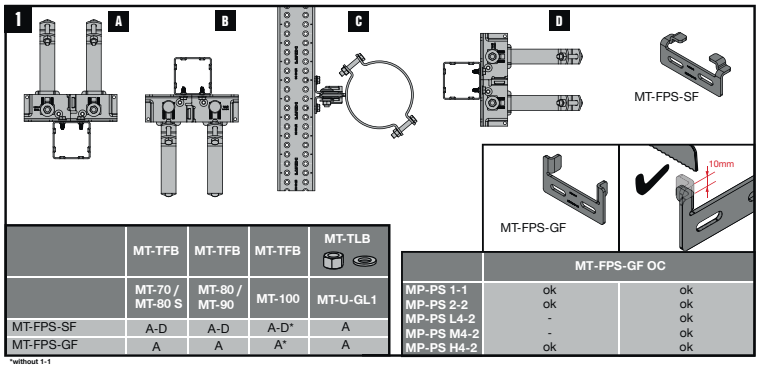


| | MT-TFB | MT-TFB | MT-TFB | MT-TLB |
|---|---|---|---|---|
| | MT-70 / MT-80 S | MT-80 / MT-90 | MT-100 | MT-U-GL1 |
| MT-FPS-SF | A-D | A-D | A-D* | A |
| MT-FPS-GF | A | A | A* | A |

*without 1-1

| | MT-FPS-GF OC | |
|---|---|---|
| MP-PS 1-1 | ok | ok |
| MP-PS 2-2 | ok | ok |
| MP-PS L4-2 | - | ok |
| MP-PS M4-2 | - | ok |
| MP-PS H4-2 | ok | ok |

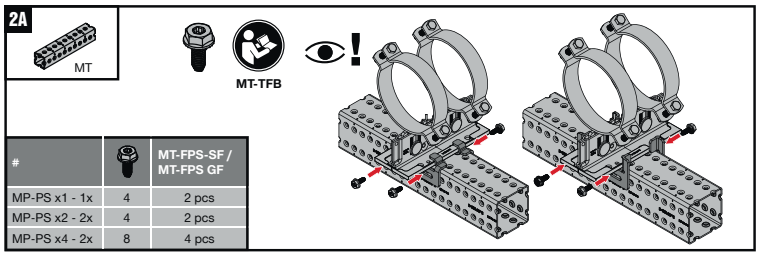


| # | | MT-FPS-SF / MT-FPS GF |
|---|---|---|
| MP-PS x1 - 1x | 4 | 2 pcs |
| MP-PS x2 - 2x | 4 | 2 pcs |
| MP-PS x4 - 2x | 8 | 4 pcs |

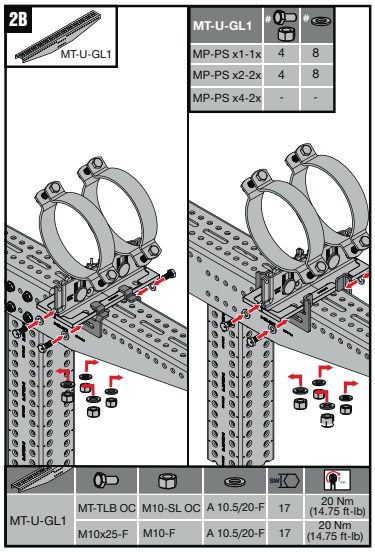


| MT-U-GL1 | # | # |
|---|---|---|
| MP-PS x1-1x | 4 | 8 |
| MP-PS x2-2x | 4 | 8 |
| MP-PS x4-2x | - | - |

| | | | | | |
|---|---|---|---|---|---|
| MT-U-GL1 | MT-TLB OC | M10-SL OC | A 10.5/20-F | 17 | 20 Nm (14.75 ft-lb) |
| | M10x25-F | M10-F | A 10.5/20-F | 17 | 20 Nm (14.75 ft-lb) |

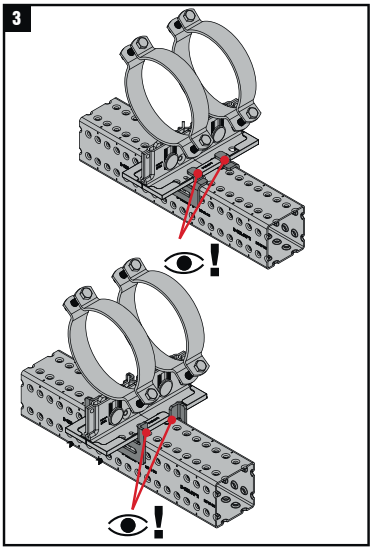


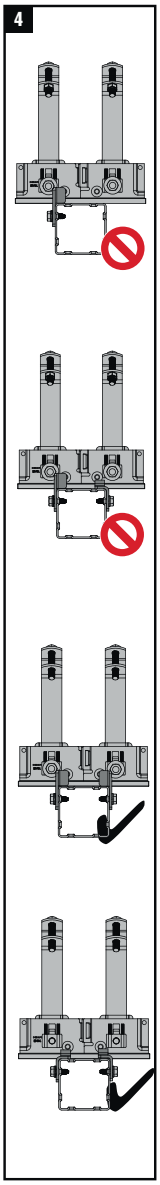


The latest IFU (Instruction For Use) is available on Hilti Online. Please check for any revisions before installing the product.

# MT Media Fixation For Closed Profiles

## Fixed point Pipe Shoe Fixation - Outdoor

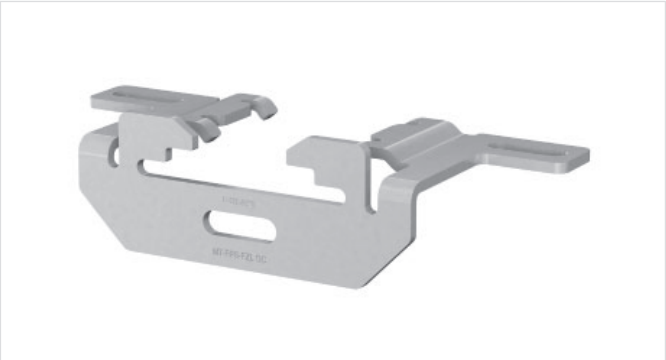

## Applications

- Installing fixed points with MP-PS pipe shoes on Hilti MT modular closed profiles
- Recommended for use in Indoor or Outdoor with low to moderate pollution (C3)

## Advantages

- One-step installation – easy and quick fastening using Hilti MT thread-forming bolts
- Simpler method – suitable for single pipe clamp pipe shoes in combination with 100 or 150mm wide MT modular closed profiles
- Safer jobsites – avoid welding and drilling

## Technical data

| | |
|---|---|
| **Material composition** | S235JR - Yield280 |
| **Surface finish** | Outdoor Coated - HDG |

## MT-FPS-FZL OC Fixed Point Pipe Shoe Fixation - Outdoor

| Order Designation | Weight | Technical data | Sales pack quantity | Item number | |
|---|---|---|---|---|---|
| **MT-FPS-FZL OC** | 0,60 kg | Outdoor, low to moderate pollution (C3 / C4 - low) | 2 pc | **2331077** | 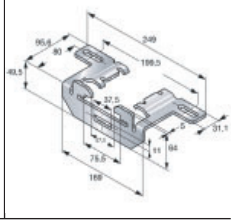 |

# MT Media Fixation For Closed Profiles

## Fixed point Pipe Shoe Fixation - Outdoor

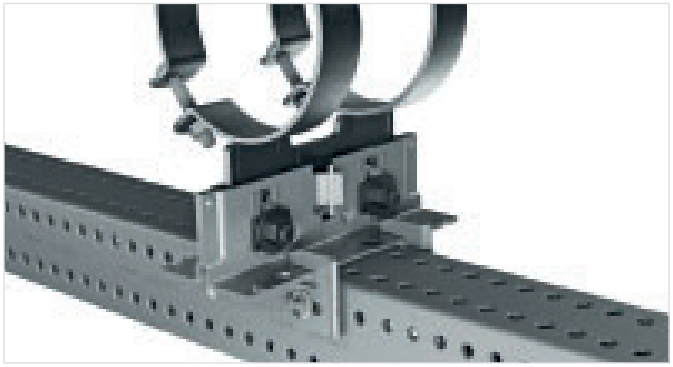


## Applications

- Installing fixed points with MP-PS pipe shoes on Hilti MT modular closed profiles
- Recommended for use in Indoor or Outdoor with low to moderate pollution (C3)

## Advantages

- One-step installation – quicker and easier fastening using Hilti MT thread-forming bolts
- Simpler method – suitable for all double pipe clamp pipe shoes in combination with all available MT modular closed profiles
- Safer jobsites – avoid welding and drilling

## Technical data

| | |
|---|---|
| **Material composition** | S280GD+ZM300 |
| **Surface finish** | Outdoor Coated - ZM |

## MT-FPS-FF OC Fixed Point Pipe Shoe Fixation - Outdoor

| Order Designation | Weight | Technical data | Sales pack quantity | Item number | |
|---|---|---|---|---|---|
| **MT-FPS-FF OC** | 0,27 kg | Outdoor, low to moderate pollution (C3 / C4 - low) | 8 pc | **2331076** | 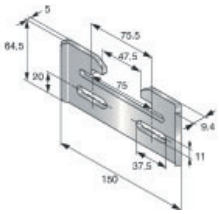 |

6

# MT Media Fixation For Closed Profiles

## Fixed point Pipe Shoe Fixation - Outdoor

### Operation Instruction

MT-FPS FZL OC / MT-FPS FF OC SET

2334481-08.2021

1

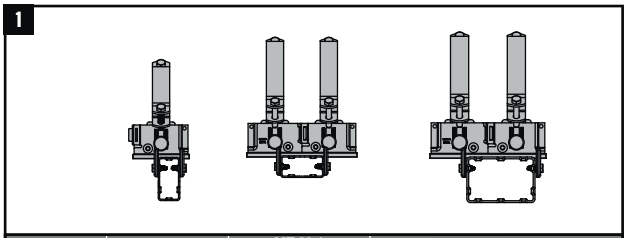

| | MT-70 / MT-80 S | MT-80 / MT-90 / MT-100 S | MT-100 |
|---|---|---|---|
| MP-PS x1-1x | 2x MT-FPS FF OC | 1x MT-FPS FZL OC | 1x MT-FPS FZL OC |
| MP-PS x2-2x | 2x MT-FPS FF OC | 2x MT-FPS FF OC | 2x MT-FPS FF OC + 4x A 10.5x30-F |
| MP-PS x4-2x | - | 4x MT-FPS FF OC | 4x MT-FPS FF OC + 8x A 10.5x30-F |

2A

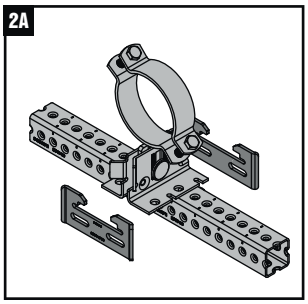

3A

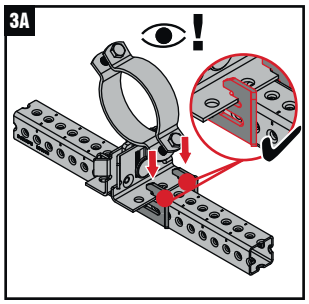

4A

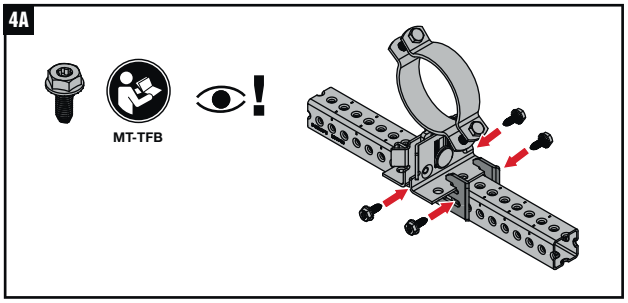


5A

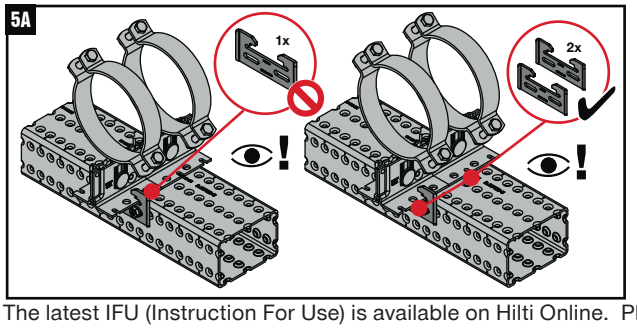


2B

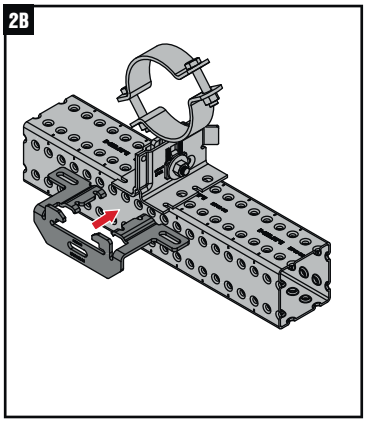

3B

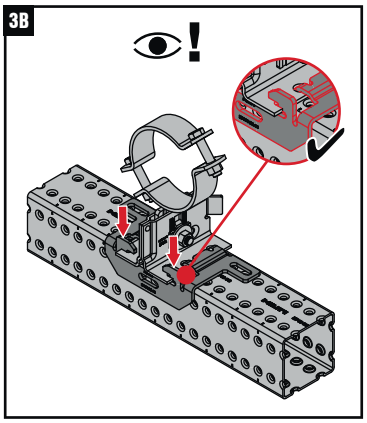

4B

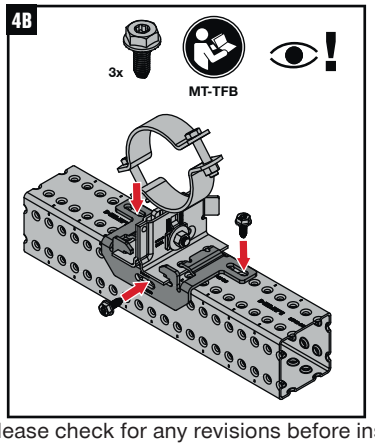


The latest IFU (Instruction For Use) is available on Hilti Online. Please check for any revisions before installing the product.

# MT Media Fixation For Closed Profiles

## Pipe Connection Plate - Outdoor

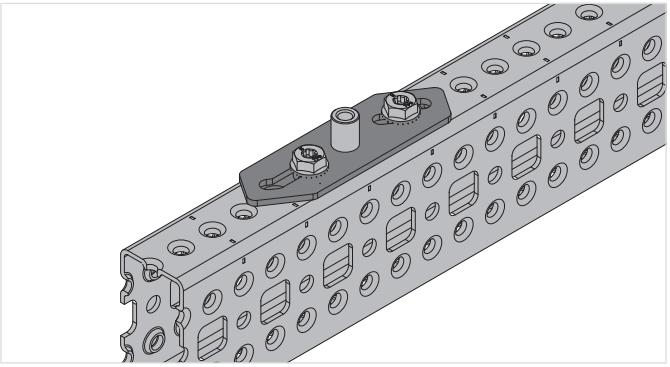

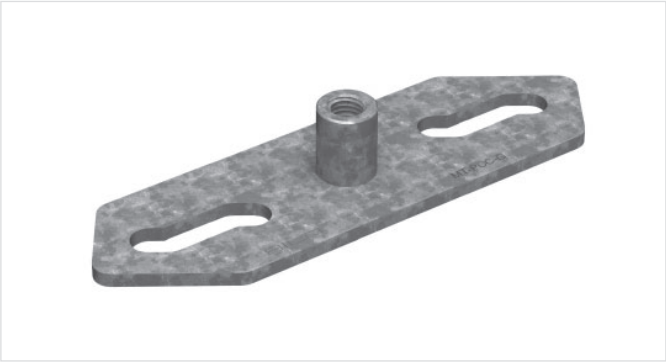

## Applications

- Connecting pipe clamps directly to MT-70, MT-80, MT-90 and MT-100 closed profiles
- Mounting medium/heavy-load pipes on trapeze
- Mounting medium/heavy-load pipes on wall brackets

## Advantages

- Faster pipe clamp installation – attach a pipe clamp using just two thread forming bolts and an impact wrench with the Adaptive Torque module
- Full adjustability – easily install pipe clamps in the right position from M8 to M16
- Corrosion resistance – hot-dip galvanized to help protect against moisture and chemical corrosion

## Technical data

| | |
|---|---|
| **Material composition** | Q355 or better steel |
| **Surface finish** | Outdoor Coated - HDG |

## MT-PCC-G M8/M10 / M12 / M16 OC Pipe Connection Plate - Outdoor

| Order Designation | Weight | Technical data | Sales pack quantity | Item number | |
|---|---|---|---|---|---|
| **MT-PCC-G M8/M10 OC** | 134 g | Outdoor, low to moderate pollution (C3 / C4 - low) | 10 pc | **2353801** | |
| **MT-PCC-G M12 OC** | 189 g | | 10 pc | **2354564** | 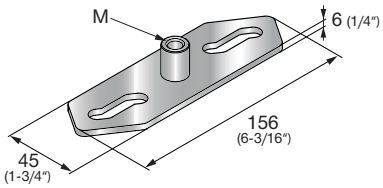  |
| **MT-PCC-G M16 OC** | 152 g | | 10 pc | **2354155** | |

6

# MT Media Fixation For Closed Profiles

## Pipe Connection Plate - Outdoor

### Operation Instruction

MT-PCC-G OC

2359997-03.2022

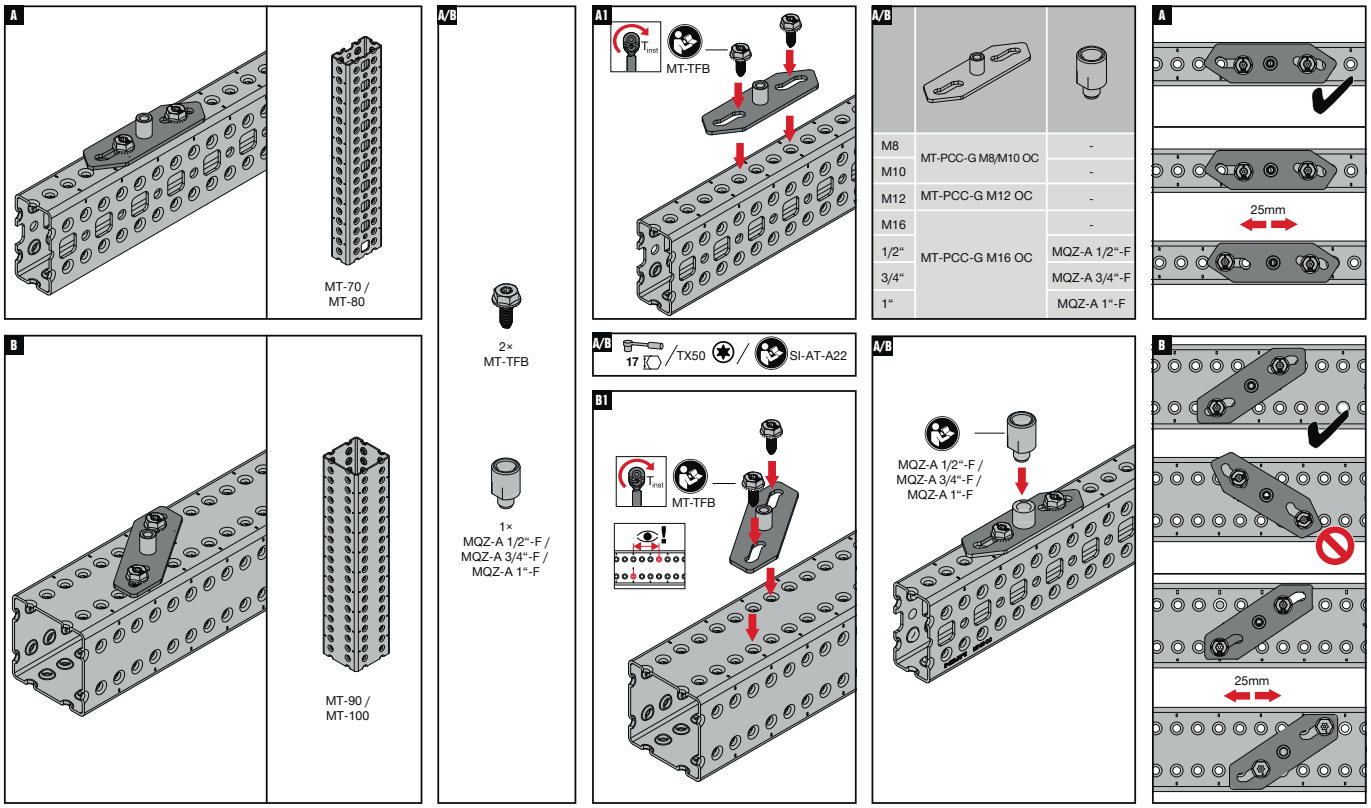


| | | |
|---|---|---|
| M8 | MT-PCC-G M8/M10 OC | - |
| M10 | | - |
| M12 | MT-PCC-G M12 OC | - |
| M16 | MT-PCC-G M16 OC | - |
| 1/2" | | MQZ-A 1/2"-F |
| 3/4" | | MQZ-A 3/4"-F |
| 1" | | MQZ-A 1"-F |

The latest IFU (Instruction For Use) is available on Hilti Online. Please check for any revisions before installing the product.

# MT Closed Profiles Base Material Connectors

## Beam Clamp Connections To Steel - Outdoor

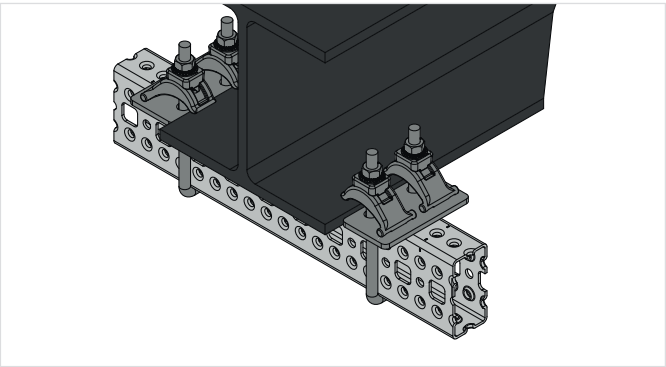

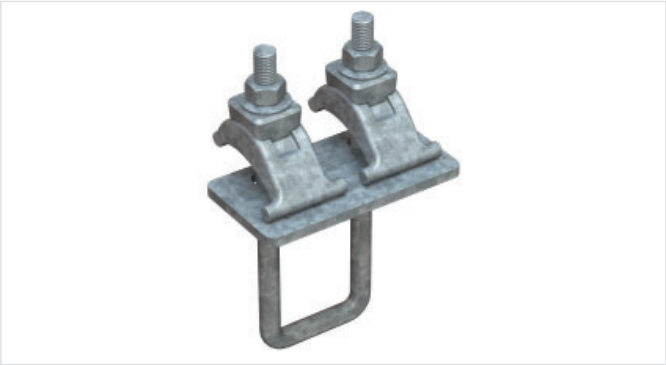

## Applications

- Mounting MT-70 and MT-80 girders on structural steel
- Suitable for use in moderately corrosive environments

## Advantages

- Part of the Hilti MT system – an economical, all-in-one solution for virtually all modular MEP support structures
- No drilling or hot works – fasten modular girders to structural steel without anchoring or welding
- Extensive software support – PROFIS Modular Support Engineering, the MEP Support Selector, Revit® families, and plug-ins for Staad Pro® and Smart 3D® are all available to streamline design and ordering

## Technical data

| | |
|---|---|
| **Material composition** | Q235 or better steel |
| **Surface finish** | Outdoor Coated - HDG |

### MT-BC-GS T OC Beam Clamp - Outdoor

| Order Designation | Weight | Technical data | Sales pack quantity | Item number | |
|---|---|---|---|---|---|
| **MT-BC-GS T OC** | 1275 g | Outdoor, low to moderate pollution (C3 / C4 - low) | 12 pc | **2273587** | 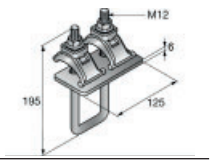  |

### MT-BC-GXL T OC Beam Clamp - Outdoor

| Order Designation | Weight | Technical data | Sales pack quantity | Item number | |
|---|---|---|---|---|---|
| **MT-BC-GXL T OC** | 2116 g | Outdoor, low to moderate pollution (C3 / C4 - low) | 10 pc | **2273589** | 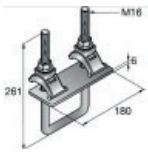  |

7

# MT Closed Profiles Base Material Connectors

## Beam Clamp Connections To Steel - Outdoor

### **Technical data** Beam Clamp

| Item image | Load drawing | Order Designation | + Fz | - Fz | ± Fx | ± Fy |
|---|---|---|---|---|---|---|
|  | 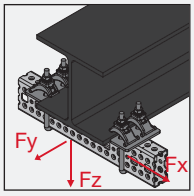  | **MT-BC-GS T** | 15,0 kN | 15,0 kN | 3,6 kN | 2,5 kN |
| | | **MT-BC-GXL T** | 30,0 kN | 30,0 kN | 5,0 kN | 6,0 kN |

**Design note**

- Shown load values are recommended values with partial safety factors for actions and resistance included
- Design value = 1.5 * recommended value
- The design resistance of the products is defined in accordance with EN1993
- Load values are only valid per pair.

### **Operation Instruction**

MT-BC-GS T OC / MT-BC-GXL T OC

2298185-09.2020

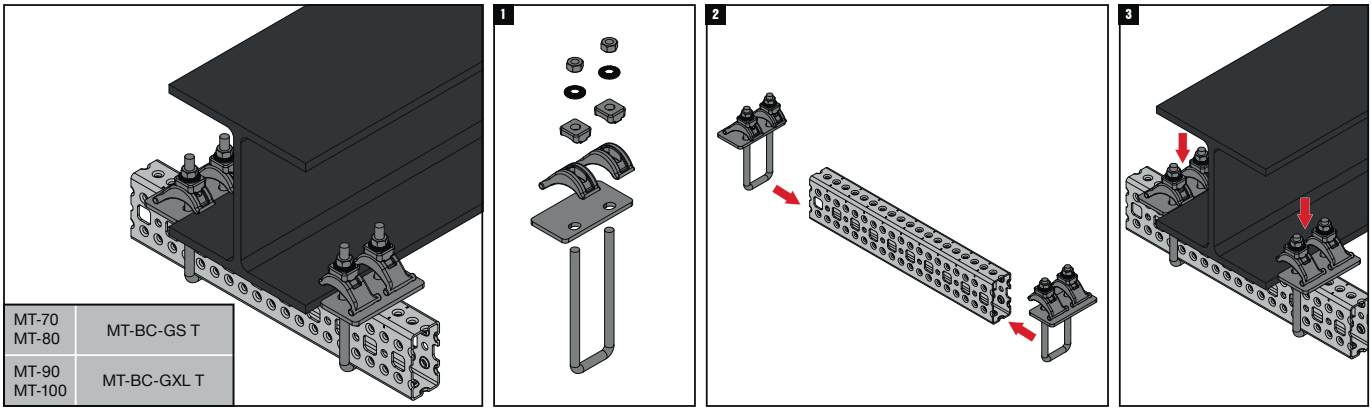


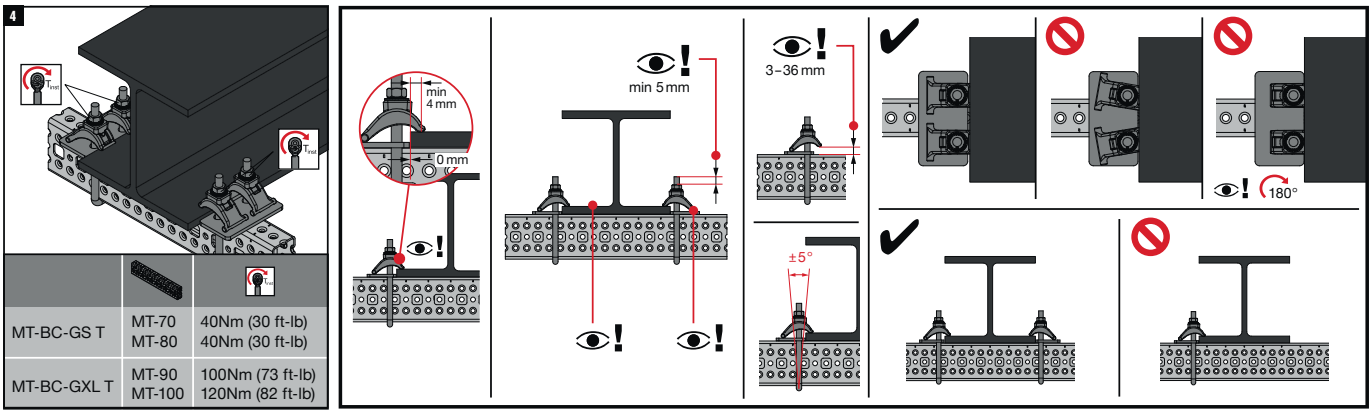


| | | |
|---|---|---|
| MT-BC-GS T | MT-70<br>MT-80 | 40Nm (30 ft-lb)<br>40Nm (30 ft-lb) |
| MT-BC-GXL T | MT-90<br>MT-100 | 100Nm (73 ft-lb)<br>120Nm (82 ft-lb) |

The latest IFU (Instruction For Use) is available on Hilti Online. Please check for any revisions before installing the product.

# MT Profile End Caps

Open C-channels (Struts)

## Applications

- Protecting strut channel edges from damage during storage and transport
- Covering any sharp edges left after cutting to size

## Advantages

- Part of the Hilti MT system – an economical, all-in-one solution for virtually all modular MEP support structures
- Safer handling – protects installers from sharp edges which may be left after cutting the strut channel
- Improved durability – helps to prevent deformed edges during storage and transport around the construction site

## Technical data

| | |
|---|---|
| **Material composition** | PPB-M02 |
| **Surface finish** | n/a |

## MT-EC-20 Channel End Cap

| Order Designation | Weight | Sales pack quantity | Item number | |
|---|---|---|---|---|
| **MT-EC-20** | 3 g | 50 pc | **2282197** | 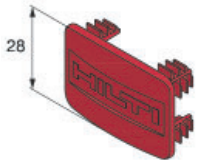  |

## MT-EC-30 Channel End Cap

| Order Designation | Weight | Sales pack quantity | Item number | |
|---|---|---|---|---|
| **MT-EC-30** | 4 g | 50 pc | **2273642** |   |

7

# MT Profile End Caps
Open C-channels (Struts)

## MT-EC-40/50 Channel End Cap

| Order Designation | Weight | Sales pack quantity | Item number | |
|---|---|---|---|---|
| **MT-EC-40/50** | 6 g | 50 pc | **2273643** | 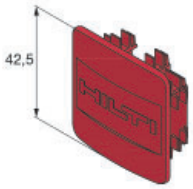  |

## MT-EC-60 Channel End Cap

| Order Designation | Weight | Sales pack quantity | Item number | |
|---|---|---|---|---|
| **MT-EC-60** | 9 g | 50 pc | **2273644** |   |

# MT Profile End Caps
Closed Profiles

## Applications

- Protecting MT-Closed profile edges from damage during storage and transport
- Covering any sharp edges left after cutting to size

## Advantages

- Part of the Hilti MT system – an economical, all-in-one solution for virtually all modular MEP support structures
- Safer handling – protects installers from sharp edges which may be left after cutting the strut channel
- Improved durability – helps to prevent deformed edges during storage and transport around the construction site

## Technical data

| | |
|---|---|
| **Material composition** | PPB-M02 |
| **Surface finish** | n/a |

### MT-EC-70 Closed Profile End Cap

| Order Designation | Weight | Sales pack quantity | Item number | |
|---|---|---|---|---|
| **MT-EC-70** | 8 g | 50 pc | **2273697** | 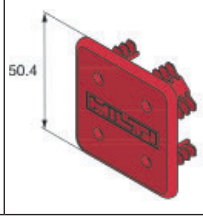  |

### MT-EC-80 Closed Profile End Cap

| Order Designation | Weight | Sales pack quantity | Item number | |
|---|---|---|---|---|
| **MT-EC-80** | 17 g | 25 pc | **2273698** | 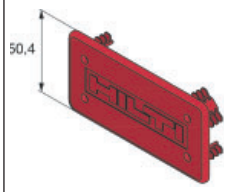  |

# MT Profile End Caps
Closed Profiles

## MT-EC-90 Closed Profile End Cap

| Order designation | Weight | Sales pack Quantity | Item number | |
|---|---|---|---|---|
| **MT-EC-90** | 31 g | 25 pc | **2273699** | 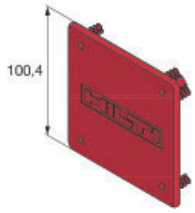  |

## MT-EC-100 Closed Profile End Cap

| Order designation | Weight | Sales pack Quantity | Item number | |
|---|---|---|---|---|
| **MT-EC-100** | 45 g | 25 pc | **2273700** |   |

# MT Profile Rubber Inlays

Open C-channels (Struts)

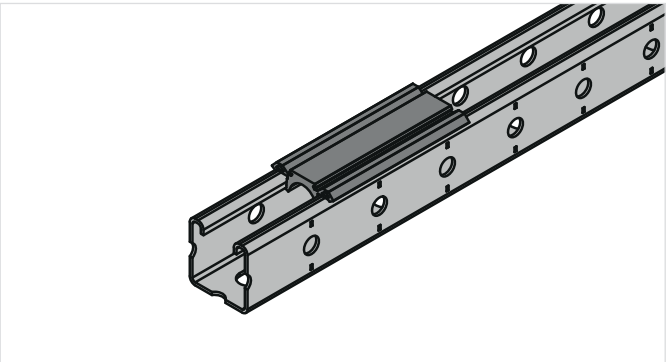

## Applications

- Acoustic insulation of heating, ventilation, and air conditioning installations, such as rectangular air ducts

## Advantages

- Improve acoustic insulation of HVAC installations – these inlays can deliver a significant noise reduction
- Easy to install – simply click into MT strut channels, no additional fasteners required. Can also be installed from the back of the open channels

## Technical data

| | |
|---|---|
| **Material composition** | EPDM |
| **Surface finish** | n/a |

## MT-RI Rubber Inlay

| Order Designation | Weight | Sales pack quantity | Item number | |
|---|---|---|---|---|
| **MT-RI 20 m** | 6924 g | 1 pc | **2337452** | 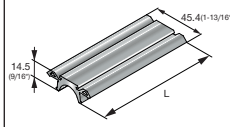  |
| **MT-RI 10 cm** | 35 g | 100 pc | **2337453** | 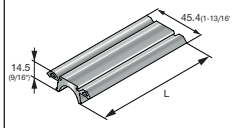  |
| **MT-RI 2 cm** | 7 g | 100 pc | **2337454** | 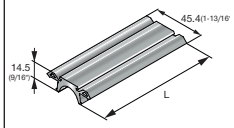  |

7

# MT Profile Rubber Inlays

Open C-channels (Struts)

## Operation Instruction

MT-RI

2348181-12.2021

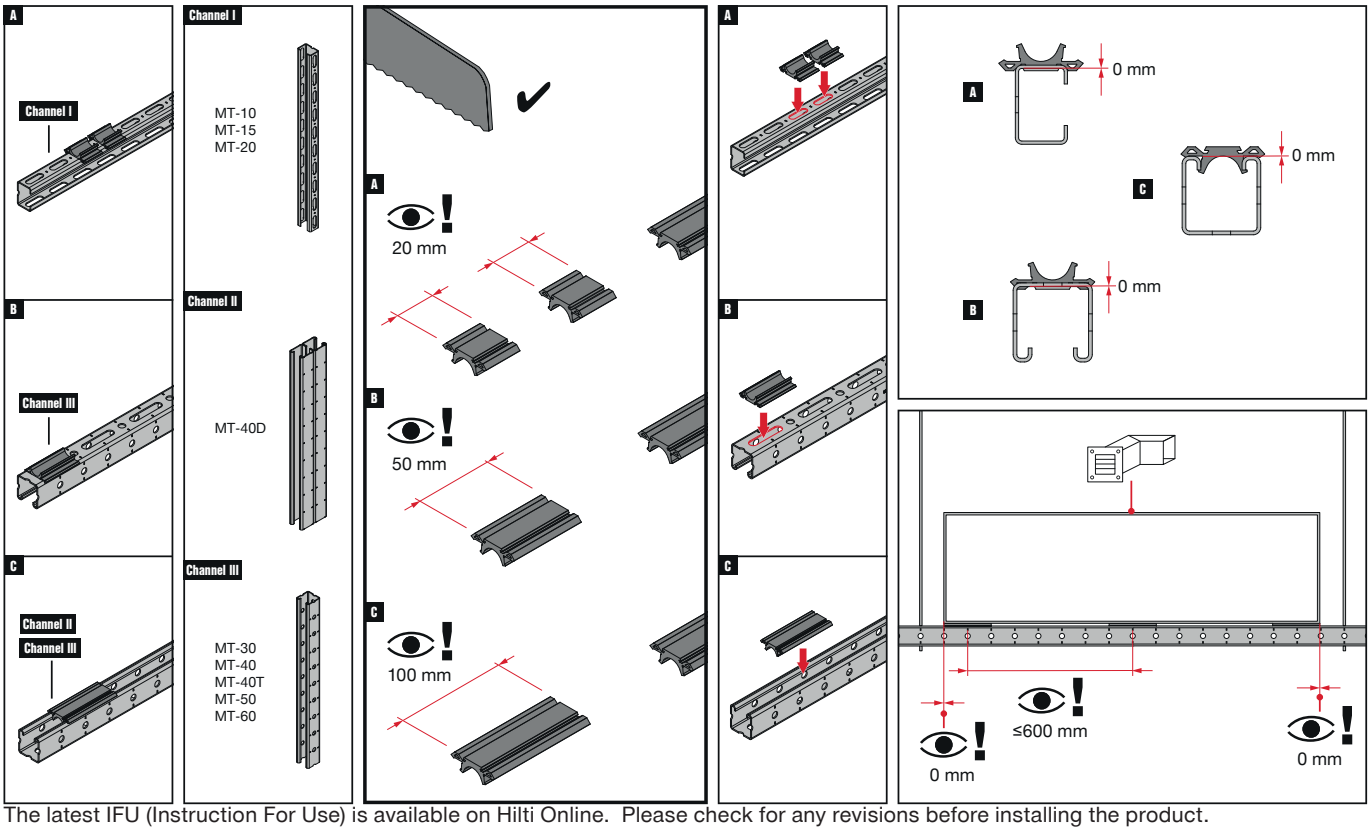


The latest IFU (Instruction For Use) is available on Hilti Online. Please check for any revisions before installing the product.

# MT-C-T 3D/2/HL OC Connector - Outdoor

**3D connector for assembling rigid strut channel structures for outdoor use with low pollution**

## Applications

- Installing ventilation equipment, ducts, pipework and cable trays on flat roofs
- Suitable for use in outdoor environments

## Advantages

- Part of the Hilti MT system – an economical, all-in-one solution for virtually all modular MEP support structures
- Easy to install – compatible with the Hilti MT Twist-Lock and hexagon bolts
- Provides rigidity to free standing structures
- Allows bracing to be removed

## Technical data

| | |
|---|---|
| **Material composition** | S235JR |
| **Surface finish** | Outdoor Coated - HDG |

## MT-C-T 3D/2/HL Connector - Outdoor

| Order Designation | Technical data | Sales pack quantity | Item number | |
|---|---|---|---|---|
| **MT-C-T 3D/2/HL OC** | Outdoor, low to moderate pollution (C3 / C4 - low) | 8 pc | **2320181** | 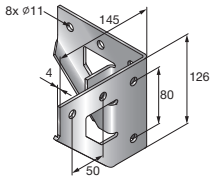  |

# MT-B-LDP ME Load distribution plate

**Medium load distribution plate for installing ventilation ducts and ventilation equipment on flat roofs**

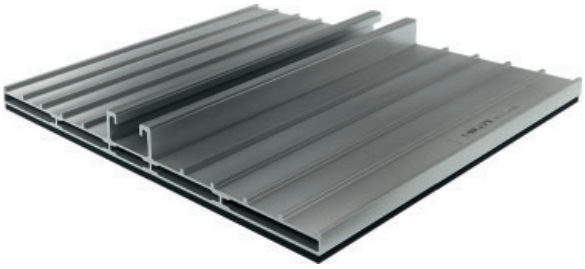

## Applications

- Installing ventilation equipment, ducts, pipework, cable trays on flat roofs
- Suitable for use in outdoor environments

## Advantages

- Part of the Hilti MT system – an economical, all-in-one solution for rooftop ventilation and other modular support systems
- Easier to handle and transport compared to pre-fabricated welded steel
- Includes a non-slip anti-vibration mat
- Suitable for outdoor applications, with features such as aluminum feet for better weather resistance

## Technical data

| | |
|---|---|
| **Material composition** | Aluminium, EPDM rubber |
| **Surface finish** | n/a |

## MT-B-LDP ME Load distribution plate

| Order Designation | Technical data | Sales pack quantity | Item number | |
|---|---|---|---|---|
| **MT-B-LDP ME** | Outdoor, low to moderate pollution (C3 / C4 - low) | 1 pc | **2328319** | 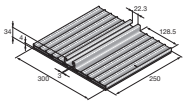 |

# MT-B-LDP S Load distribution plate

**Small load distribution plate for installing ventilation ducts, pipework or cable trays on flat roofs**

## Applications

- Installing ventilation ducts, pipework and cable trays on flat roofs
- Suitable for use in outdoor environments

## Advantages

- Part of the Hilti MT system – an economical, all-in-one solution for rooftop ventilation and other modular support systems
- Easier to handle and transport compared to pre-fabricated welded steel
- Includes a non-slip anti-vibration mat
- Suitable for outdoor applications, with features such as aluminum feet for better weather resistance

## Technical data

| | |
|---|---|
| **Material composition** | Aluminium, EPDM rubber |
| **Surface finish** | n/a |

## MT-B-LDP S Load distribution plate

| Order Designation | Technical data | Sales pack quantity | Item number | |
|---|---|---|---|---|
| **MT-B-LDP S** | Outdoor, low to moderate pollution (C3 / C4 - low) | 2 pc | **2320182** | 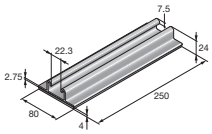  |

# MT-C-LDP L1 OC Angle Connector - Outdoor

**Angle connector for assembling strut channels structure or channel with Load Distribution Plate, for outdoor use with low pollution**

## Applications

- Fastening connections between two strut channels or one channel and Load Distribution Plate
- Perfectly suitable for outdoor applications

## Advantages

- Part of the Hilti MT system – an economical, all-in-one solution for virtually all modular MEP support structures
- Vertical channel can be inclined up to 7-degrees for compensation of roof pitch
- Connector with channel can be inclined up to 10-degrees for compensation of roof pitch

## Technical data

| | |
|---|---|
| **Material composition** | Q235 or better steel |
| **Surface finish** | Outdoor Coated - HDG |

## MT-C-LDP L1 OC Angle Connector - Outdoor

| Order Designation | Technical data | Sales pack quantity | Item number | |
|---|---|---|---|---|
| **MT-C-LDP L1 OC** | Outdoor, low to moderate pollution (C3 / C4 - low) | 8 pc | **2320180** | 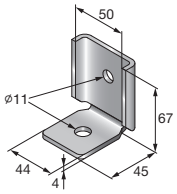  |

# MT-C-T 3D/2/HL OC Connector - Outdoor

## Operation instruction
MT-C-T 3D/2/HL OC

2321403-03.2021

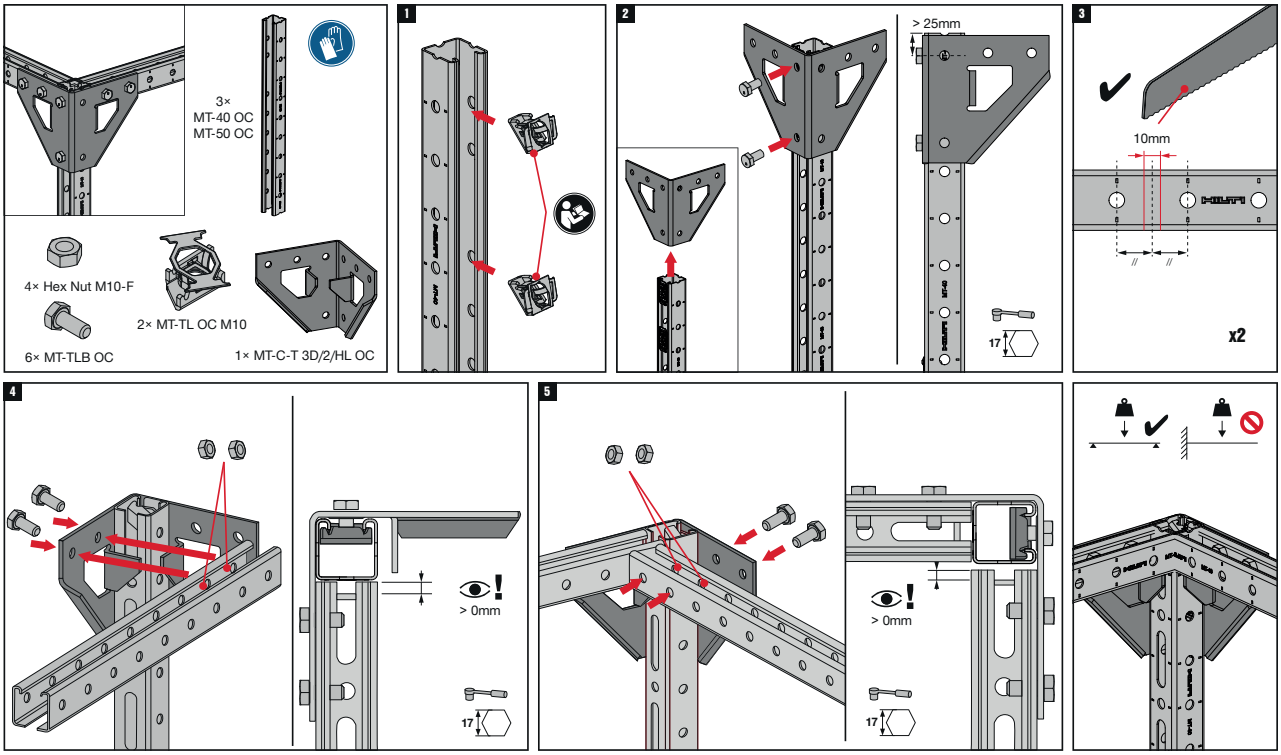


The latest IFU (Instruction For Use) is available on Hilti Online. Please check for any revisions before installing the product.

# MT-B-LDP ME Load distribution plate

## Operation instruction
MT-B-LDP ME

2330200-06.2021

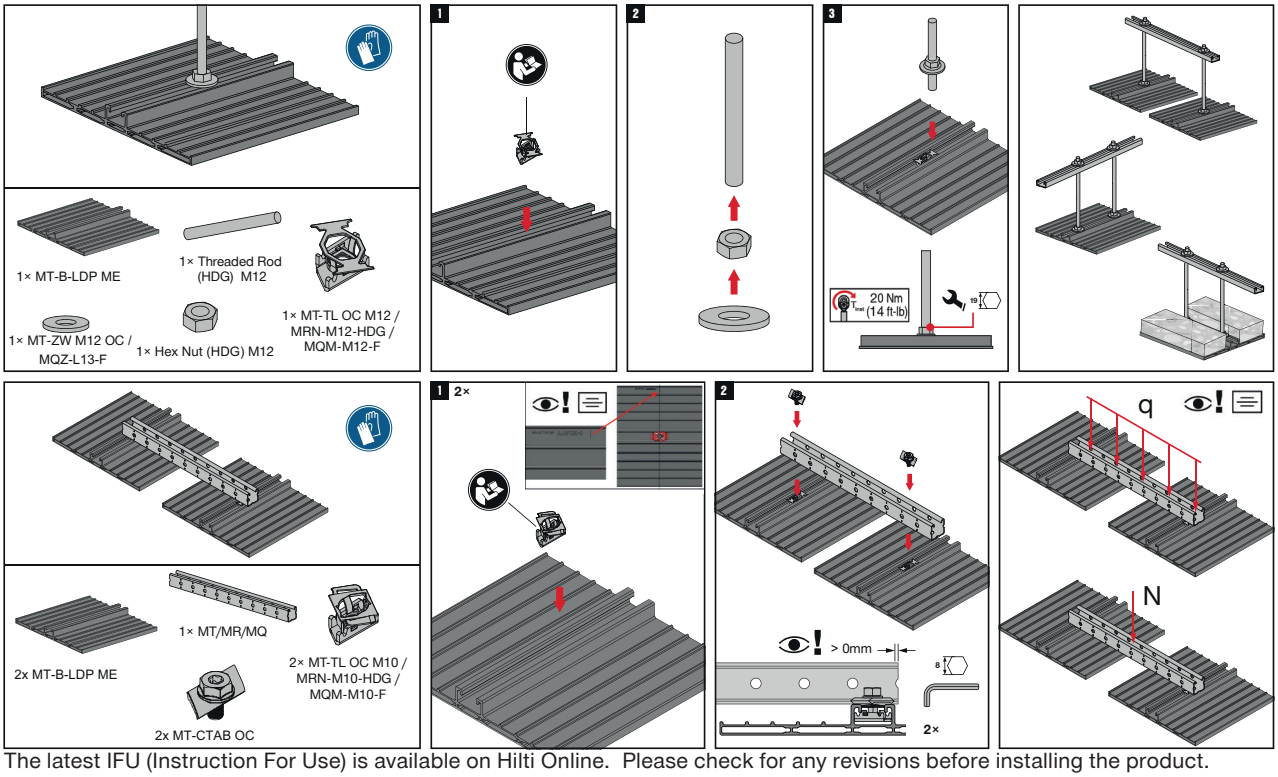


The latest IFU (Instruction For Use) is available on Hilti Online. Please check for any revisions before installing the product.

# MT-B-LDP S Load distribution plate

## Operation instruction

MT-B-LDP S

2321404-06.2021

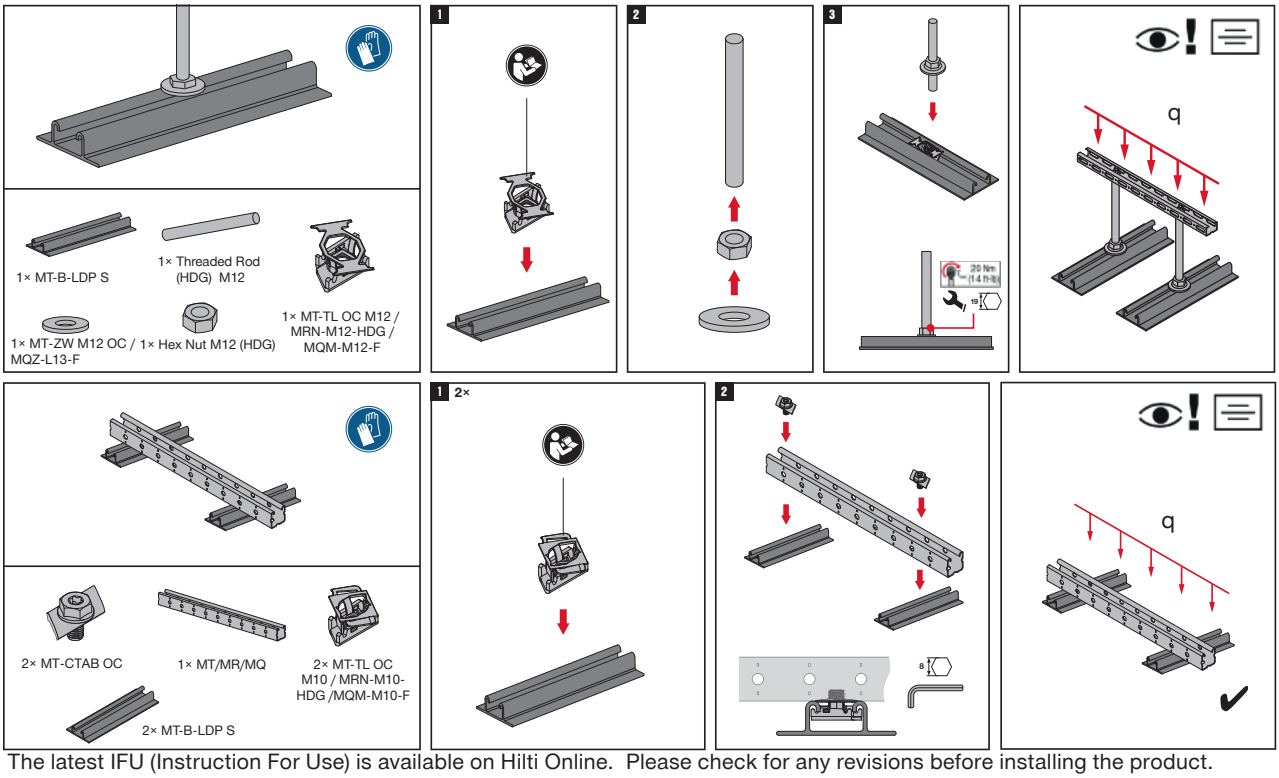


The latest IFU (Instruction For Use) is available on Hilti Online. Please check for any revisions before installing the product.

# MT-C-LDP L1 OC Angle Connector - Outdoor

## Operation instruction

MT-C-LDP L1 OC

2321402-02.2021

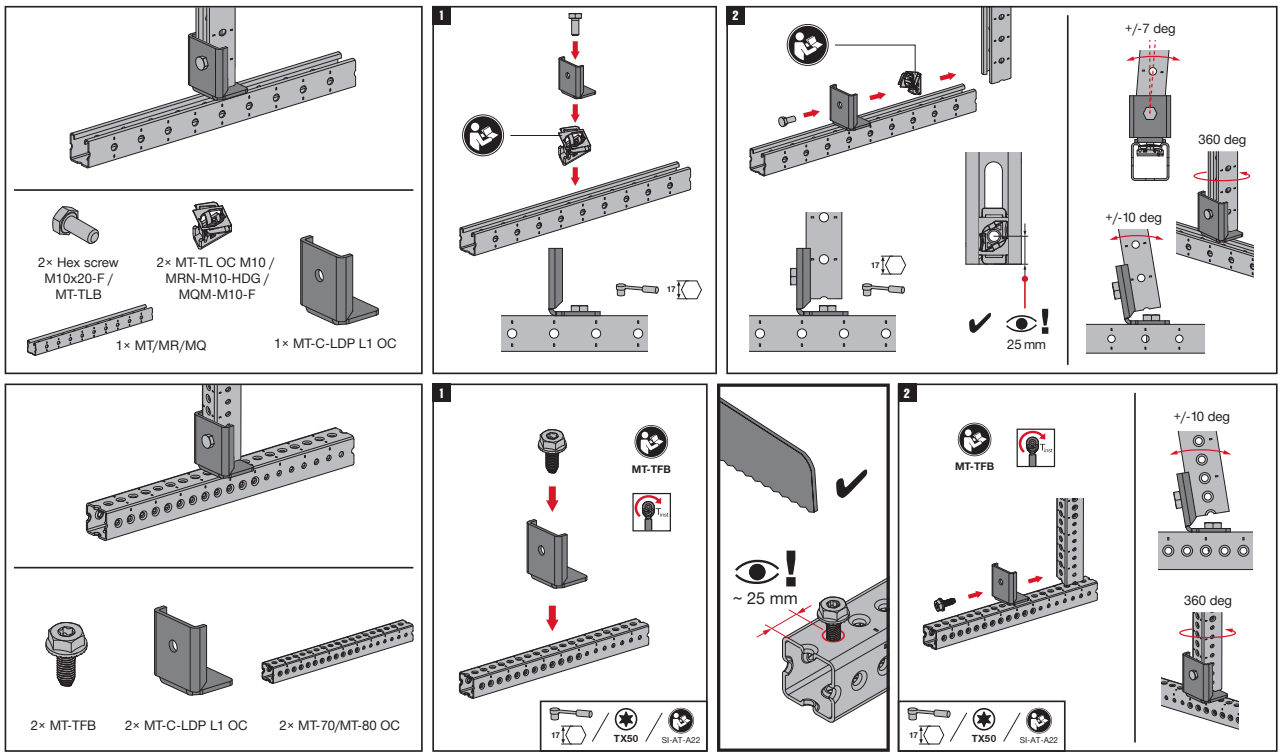


The latest IFU (Instruction For Use) is available on Hilti Online. Please check for any revisions before installing the product.

# MT-S-RS Rod stiffener

**Pre-assembled connector for fastening strut channel around threaded rod to provide seismic bracing**

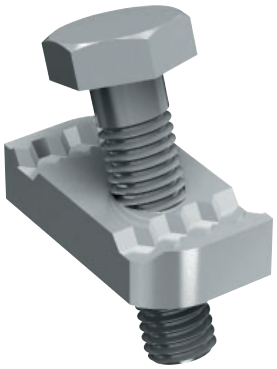

## Applications

- Fixing threaded rod lengthwise within MT strut channels
- Increasing the compressive strength of threaded rod for use as seismic bracing in MEP support structures
- Suitable for use in dry, indoor environments

## Advantages

- Part of the Hilti MT system – an economical, all-in-one solution for virtually all modular MEP support structures
- Increasing the compressive strength of threaded rod for use as seismic bracing in MEP support structures
- Adaptable – unlike welding, modular rod stiffeners allow you to modify strut channel framing for future MEP requirements

## Technical data

| | |
|---|---|
| **Material composition** | Q235 or better steel |
| **Surface finish** | Pre-galvanized - for dry indoor use only |

## MT-S-RS Rod stiffener

| Order Designation | Technical data | Sales pack quantity | Item number | |
|---|---|---|---|---|
| **MT-S-RS** | Dry indoor conditions (C1) Indoor with temporary condensation (C2) | 25 pc | **2282198** | 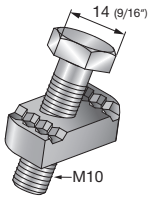  |

# MT-S-RS OC Rod stiffener - Outdoor

**Pre-assembled connector for fastening strut channel around threaded rod to provide seismic bracing**

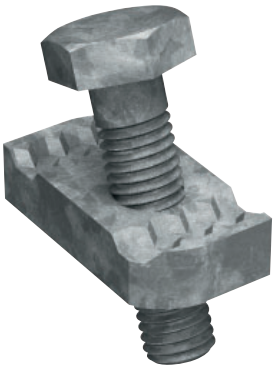

## Applications

- Fixing threaded rod lengthwise within MT strut channels
- Increasing the compressive strength of threaded rod for use as seismic bracing in MEP support structures
- Suitable for use in moderately corrosive environments

## Advantages

- Part of the Hilti MT system – an economical, all-in-one solution for virtually all modular MEP support structures
- Increasing the compressive strength of threaded rod for use as seismic bracing in MEP support structures
- Adaptable – unlike welding, modular rod stiffeners allow you to modify strut channel framing for future MEP requirements

## Technical data

| | |
|---|---|
| **Material composition** | Q235 or better steel |
| **Surface finish** | Hot-dip galvanized - for outdoor use |

## MT-S-RS Rod stiffener

| Order Designation | Technical data | Sales pack quantity | Item number | |
|---|---|---|---|---|
| **MT-S-RS OC** | Outdoor, low to moderate pollution (C3 / C4 - low) | 25 pc | **2273584** | 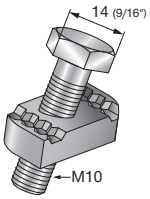  |

# MT-S-H1 Seismic Brace Base

**One-hole hinged connector for assembling seismic bracing of MT strut channel framing**

## Applications

- Seismic bracing of strut channel framing
- Anchoring strut channel brace members to concrete for use as seismic bracing
- Connecting strut channel brace members to MT-S-L seismic angle brackets for use as seismic bracing
- Suitable for use in dry, indoor environments

## Advantages

- Part of the Hilti MT system – an economical, all-in-one solution for virtually all modular MEP support structures
- Easy to install – pivoting joint simplifies assembly and fastening
- Engineering and calculation service available – your local Hilti Engineers can provide advice and calculation services on more complex projects

## Technical data

| | |
|---|---|
| **Material composition** | Q355 or better steel |
| **Surface finish** | Pre-galvanized - for dry indoor use only |

## MT-S-H1 Seismic Brace Base

| Order Designation | Technical data | Sales pack quantity | Item number | |
|---|---|---|---|---|
| **MT-S-H1 M10** | Dry indoor conditions (C1) Indoor with temporary condensation (C2) | 10 pc | **2273645** | 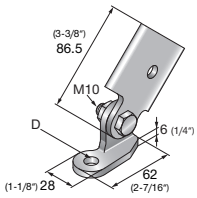  |
| **MT-S-H1 M12** | | 10 pc | **2273646** | |

# MT-S-H1 OC Seismic Brace Base - Outdoor

**One-hole hinged connector for assembling seismic bracing of MT strut channel framing**

## Applications

- Seismic bracing of strut channel framing
- Anchoring strut channel brace members to concrete for use as seismic bracing
- Connecting strut channel brace members to MT-S-L seismic angle brackets for use as seismic bracing
- Suitable for use in moderately corrosive environments

## Technical data

| | |
|---|---|
| **Material composition** | Q355 or better steel |
| **Surface finish** | Hot-dip galvanized - for outdoor use |

## Advantages

- Part of the Hilti MT system – an economical, all-in-one solution for virtually all modular MEP support structures
- Easy to install – pivoting joint simplifies assembly and fastening
- Engineering and calculation service available – your local Hilti Engineers can provide advice and calculation services on more complex projects
- Corrosion resistant – hot-dip galvanized to help protect against moisture and chemical corrosion

## MT-S-H1 OC Seismic Brace Base - Outdoor

| Order Designation | Technical data | Sales pack quantity | Item number | |
|---|---|---|---|---|
| **MT-S-H1 M10 OC** | Outdoor, low to moderate pollution (C3 / C4 - low) | 10 pc | **2282199** | 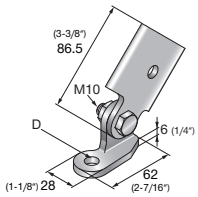  |
| **MT-S-H1 M12 OC** | | 10 pc | **2282200** | |

# MT-S-H2 Seismic Brace Base

**Two-hole hinged connector for assembling seismic bracing of MT strut channel framing**

## Applications

- Seismic bracing of strut channel framing
- Anchoring strut channel brace members to concrete for use as seismic bracing
- Connecting strut channel brace members to MT-S-L seismic angle brackets for use as seismic bracing
- Suitable for use in dry, indoor environments

## Advantages

- Part of the Hilti MT system – an economical, all-in-one solution for virtually all modular MEP support structures
- Easy to install – pivoting joint simplifies assembly and fastening
- Engineering and calculation service available – your local Hilti Engineers can provide advice and calculation services on more complex projects

## Technical data

| | |
|---|---|
| **Material composition** | Q355 or better steel |
| **Surface finish** | Pre-galvanized - for dry indoor use only |

## MT-S-H2 Seismic Brace Base

| Order Designation | Technical data | Sales pack quantity | Item number | |
|---|---|---|---|---|
| **MT-S-H2 M10** | Dry indoor conditions (C1) Indoor with temporary condensation (C2) | 10 pc | **2273647** | 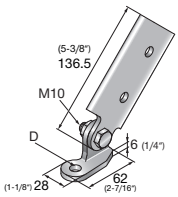  |
| **MT-S-H2 M12** | | 10 pc | **2273648** | |

# MT-S-H2 OC Seismic Brace Base - Outdoor

**Two-hole hinged connector for assembling seismic bracing of MT strut channel framing**

## Applications

- Seismic bracing of strut channel framing
- Anchoring strut channel brace members to concrete for use as seismic bracing
- Connecting strut channel brace members to MT-S-L seismic angle brackets for use as seismic bracing
- Suitable for use in moderately corrosive environments

## Technical data

| | |
|---|---|
| **Material composition** | Q355 or better steel |
| **Surface finish** | Hot-dip galvanized - for outdoor use |

## Advantages

- Part of the Hilti MT system – an economical, all-in-one solution for virtually all modular MEP support structures
- Easy to install – pivoting joint simplifies assembly and fastening
- Engineering and calculation service available – your local Hilti Engineers can provide advice and calculation services on more complex projects
- Corrosion resistant – hot-dip galvanized to help protect against moisture and chemical corrosion

## MT-S-H2 OC Seismic Brace Base - Outdoor

| Order Designation | Technical data | Sales pack quantity | Item number | |
|---|---|---|---|---|
| **MT-S-H2 M10 OC** | Outdoor, low to moderate pollution (C3 / C4 - low) | 10 pc | **2282201** | 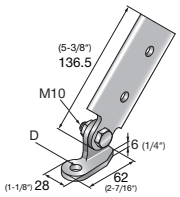  |
| **MT-S-H2 M12 OC** | | 10 pc | **2282202** | |

# MT-S-L Seismic angle bracket

**Angle bracket for assembling braced MT strut channel structures in seismic zones**

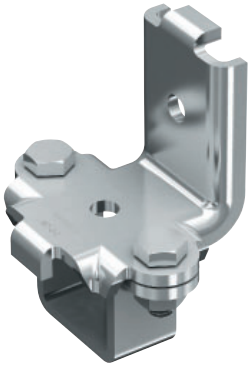

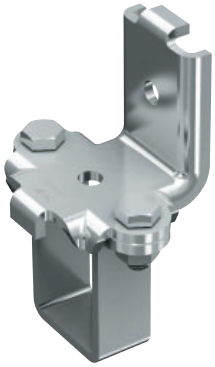

## Applications

- Right-angle connections between MT-40, MT-60 strut channels & MT-40D double strut channels with connection to seismic bracing
- Assembling metal framing for MEP support structures in seismic zones
- Suitable for use in dry, indoor environments

## Technical data

| | |
|---|---|
| **Material composition** | Q235 or better steel |
| **Surface finish** | Pre-galvanized - for dry indoor use only |

## Advantages

- Part of the Hilti MT system – an economical, all-in-one solution for virtually all modular MEP support structures
- Easy to install – compatible with the Hilti MT Twist-Lock, a faster alternative to spring nuts for assembling a modular support system
- Winged angle connector – includes connection points to MT-S-H1 and MT-S-H2
- Adaptable – unlike welding, seismic brackets allow you to modify strut channel framing for future MEP requirements

## MT-S-L Seismic angle bracket

| Order Designation | Technical data | Sales pack quantity | Item number | |
|---|---|---|---|---|
| **MT-S-L 40-50** | Dry indoor conditions (C1) Indoor with temporary condensation (C2) | 10 pc | **2273649** | 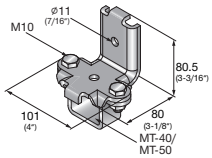  |
| **MT-S-L 60** | | 10 pc | **2273650** | 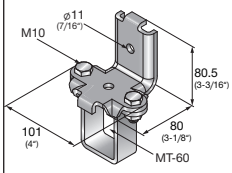  |
| **MT-S-L 40D** | | 10 pc | **2273651** | 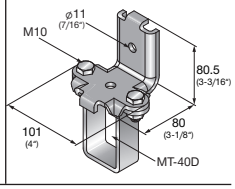  |

9

# MT-S-L OC Seismic angle bracket - Outdoor

**Angle bracket for assembling braced MT strut channel structures in seismic zones**

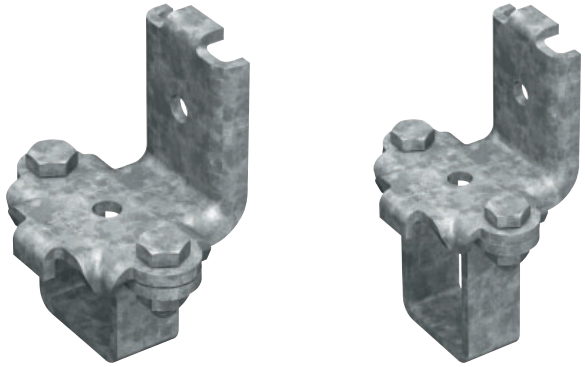

## Applications

- Right-angle connections between MT-40, MT-60 strut channels & MT-40D double strut channels with connection to seismic bracing
- Assembling metal framing for MEP support structures in seismic zones
- Suitable for use in moderately corrosive environments

## Technical data

| | |
|---|---|
| **Material composition** | Q235 or better steel |
| **Surface finish** | Hot-dip galvanized - for outdoor use |

## Advantages

- Part of the Hilti MT system – an economical, all-in-one solution for virtually all modular MEP support structures
- Easy to install – compatible with the Hilti MT Twist-Lock, a faster alternative to spring nuts for assembling a modular support system
- Adaptable – unlike welding, seismic brackets allow you to modify strut channel framing for future MEP requirements
- Engineering and calculation service available – your local Hilti Engineers can provide advice and calculation services on more complex projects

## MT-S-L OC Seismic angle bracket - Outdoor

| Order Designation | Technical data | Sales pack quantity | Item number | |
|---|---|---|---|---|
| **MT-S-L 40-50 OC** | Outdoor, low to moderate pollution (C3 / C4 - low) | 10 pc | **2282203** | 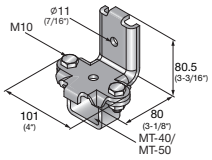  |
| **MT-S-L 60 OC** | | 10 pc | **2282204** | 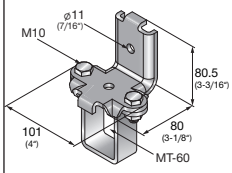  |
| **MT-S-L 40D OC** | | 10 pc | **2282205** | 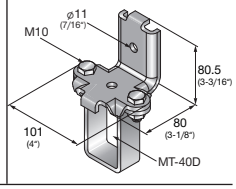  |

# MT-S-RS Rod stiffener

## Operation instruction

MT-S-RS / MT-S-RS OC

2294624-08.2020

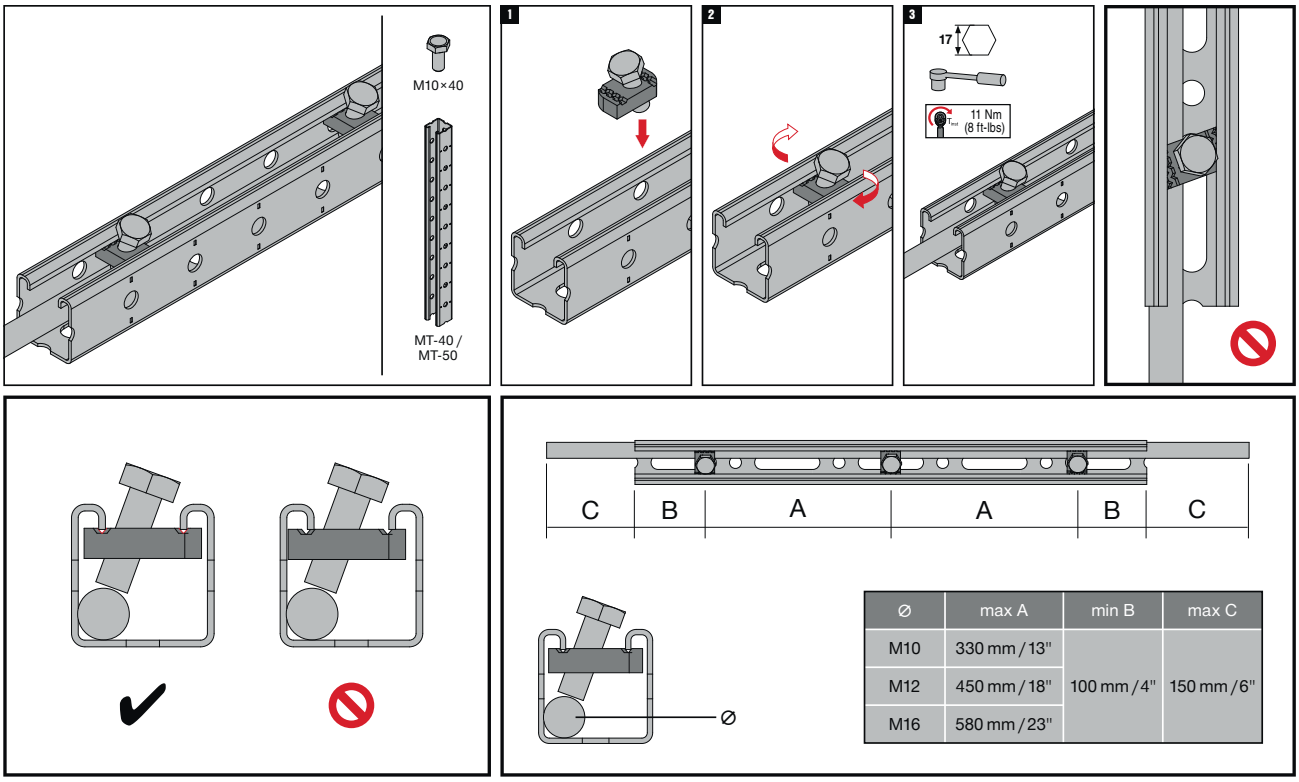


| Ø | max A | min B | max C |
|---|---|---|---|
| M10 | 330 mm / 13" | 100 mm / 4" | 150 mm / 6" |
| M12 | 450 mm / 18" | | |
| M16 | 580 mm / 23" | | |

The latest IFU (Instruction For Use) is available on Hilti Online. Please check for any revisions before installing the product.

# MT-S-L Seismic angle bracket

## Operation instruction

MT-S-L 40-50 / MT-S-L 60 / MT-S-L 40D
MT-S-L 40-50 OC / MT-S-L 60 OC / MT-S-L 40D OC

2294626-09.2020

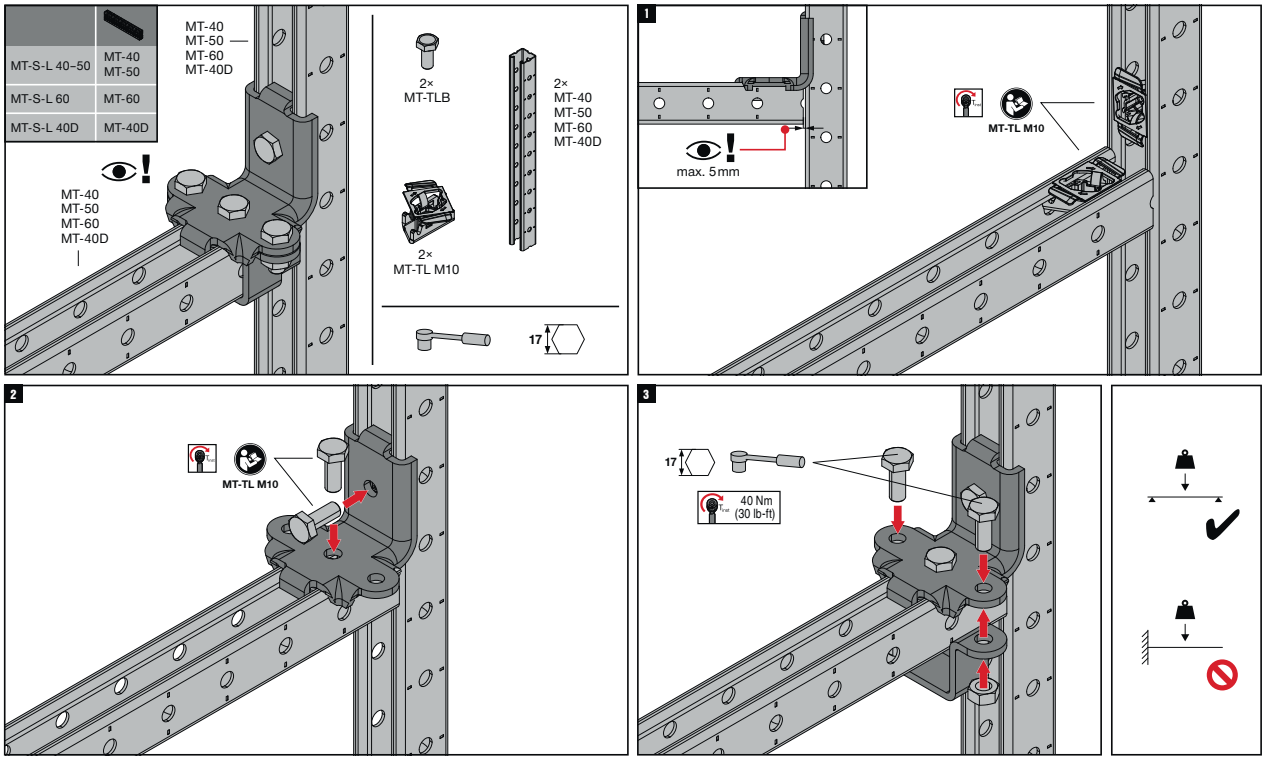


The latest IFU (Instruction For Use) is available on Hilti Online. Please check for any revisions before installing the product.

# MT-S-H1 Seismic Brace Base

1

## Operation instruction

MT-S-H1 M10/ MT-S-H1 M12
MT-S-H1 M10 OC/ MT-S-H1 M12 OC

2294625-03.2022

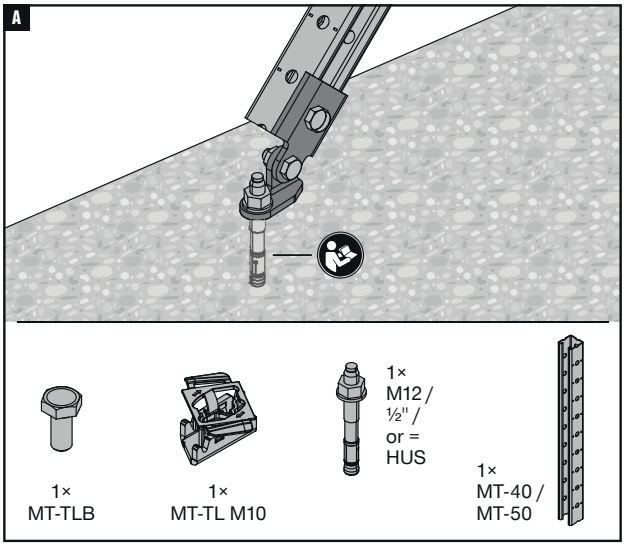


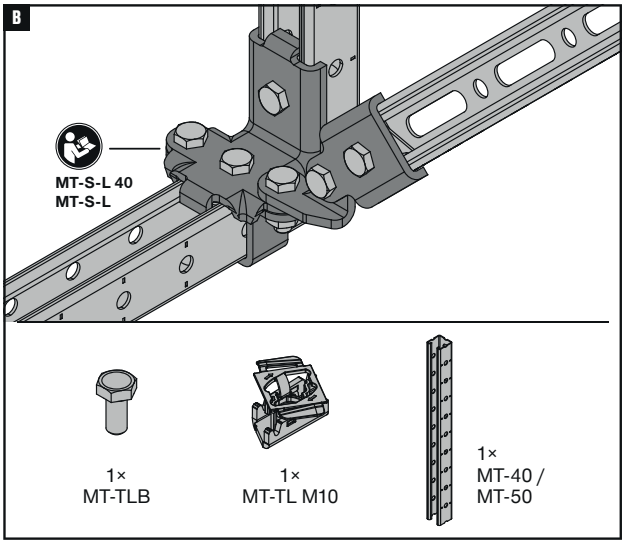


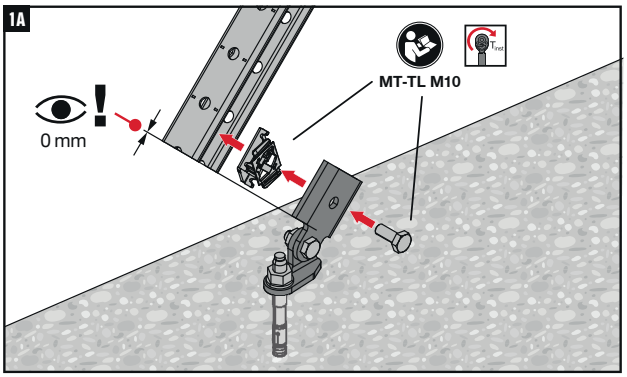


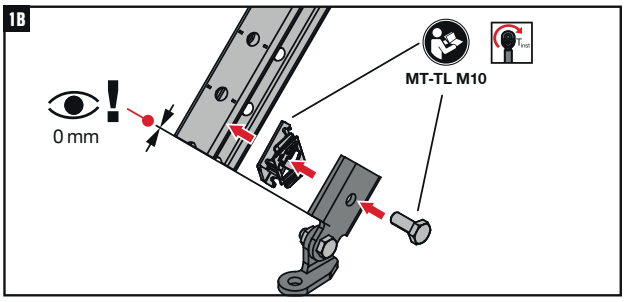


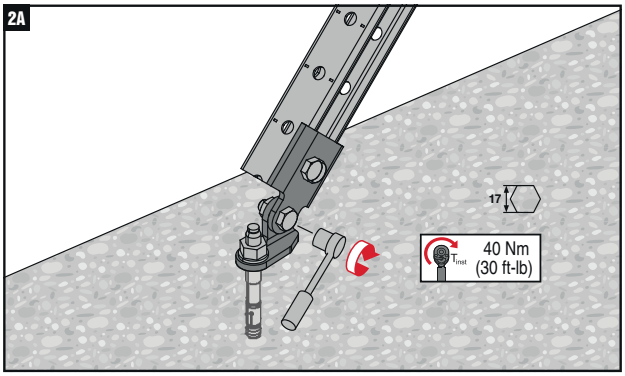


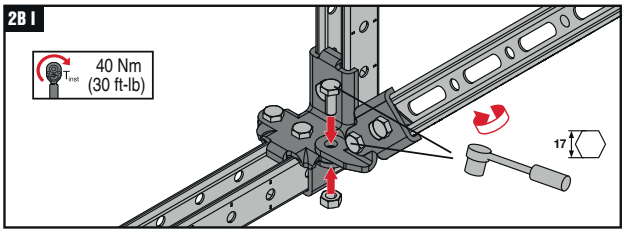


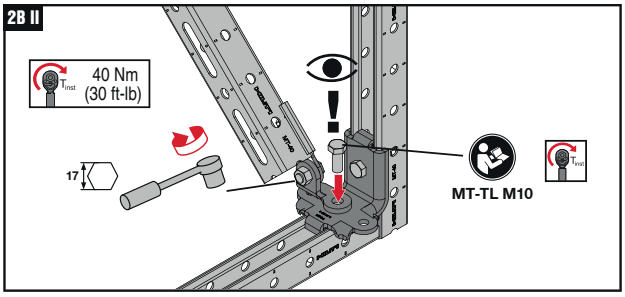


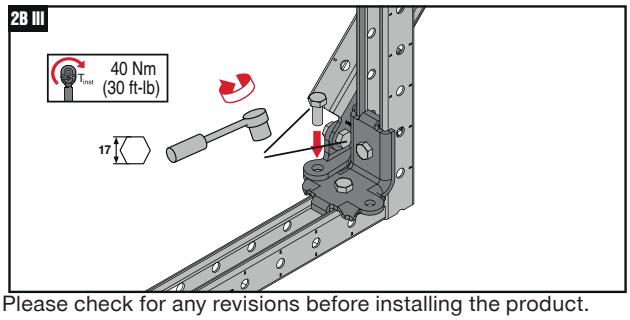


The latest IFU (Instruction For Use) is available on Hilti Online. Please check for any revisions before installing the product.

# MT-S-H2 Seismic Brace Base

## Operation instruction

MT-S-H2 M10/ MT-S-H2 M12
MT-S-H2 M10 OC/ MT-S-H2 M12 OC

2300064-10.2020

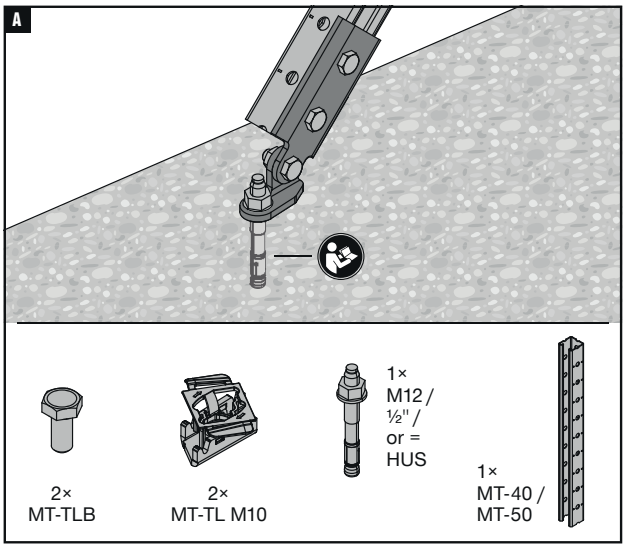


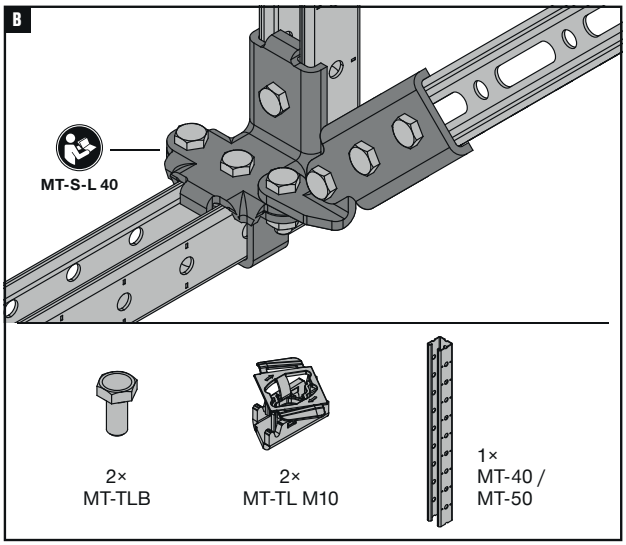


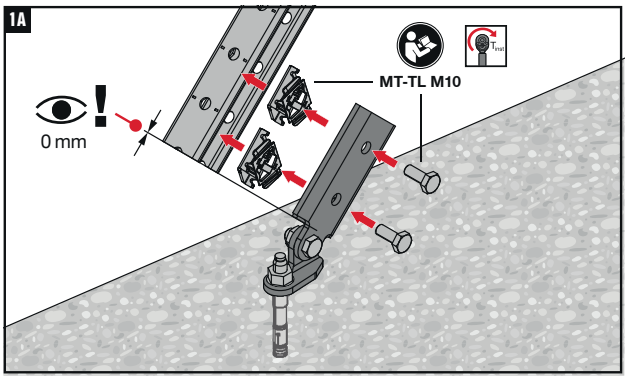


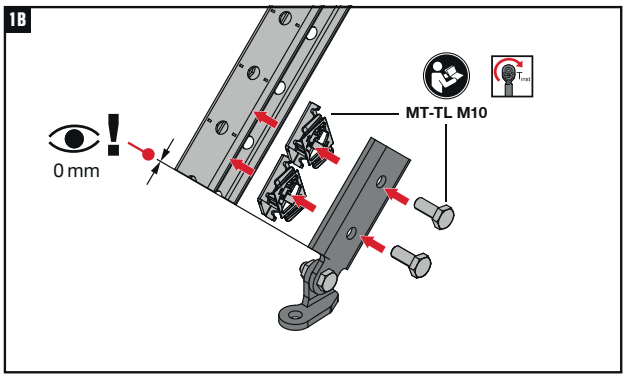


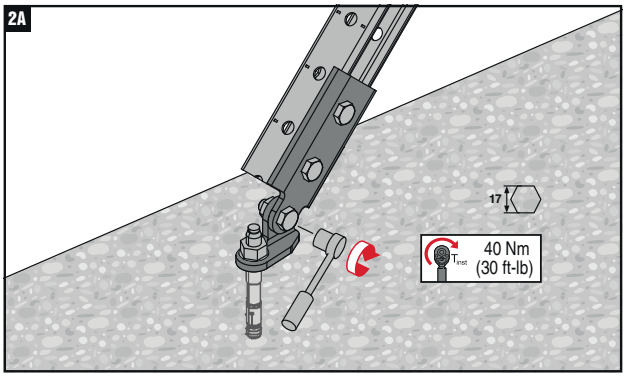


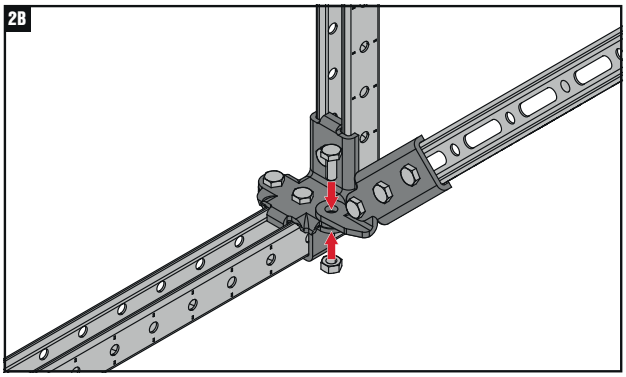


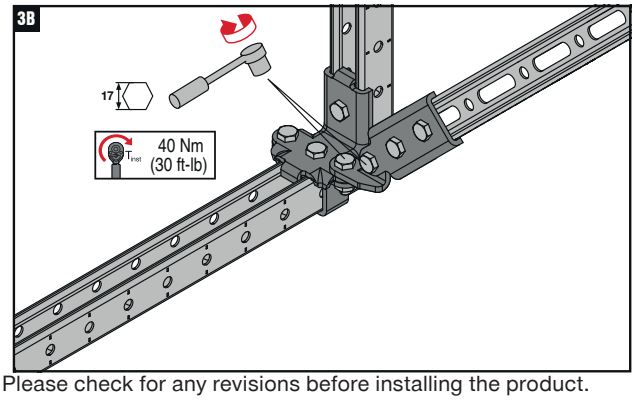


The latest IFU (Instruction For Use) is available on Hilti Online. Please check for any revisions before installing the product.

# MT-S-A Seismic hinge

**Galvanized seismic hinge for use as a bracing component**

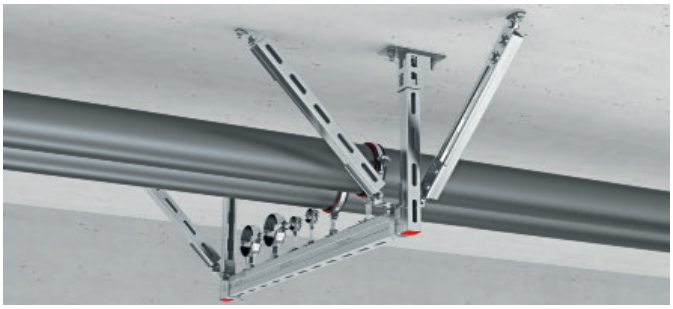

## Applications

- Installing pipes, cable trays and air duct supports in seismic-relevant areas

## Advantages

- High load capacity – engineered for optimal transfer of seismic loads
- Easily combinable with other Hilti seismic components

## Technical data

| | |
|---|---|
| **Material composition** | S355 MC - DIN EN 10149-2 |
| **Surface finish** | Indoor Coated - Electro galvanized |

## MT-S-A Seismic hinge

| Order Designation | Technical data | Sales pack quantity | Item number | |
|---|---|---|---|---|
| **MT-S-A-8** | Dry indoor conditions (C1) Indoor with temporary condensation (C2) | 10 pc | **2083721** | 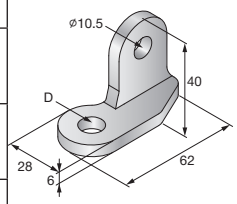  |
| **MT-S-A-10** | | 10 pc | **2083722** | |
| **MT-S-A-12** | | 10 pc | **2083723** | |
| **MT-S-A-16** | | 10 pc | **2083724** | |

# MT-S-AP Seismic rod hinge

**Galvanized threaded rod hinge for seismic bracing of MEP support structures**

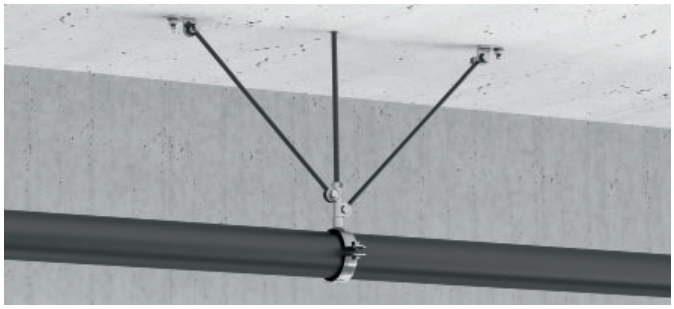

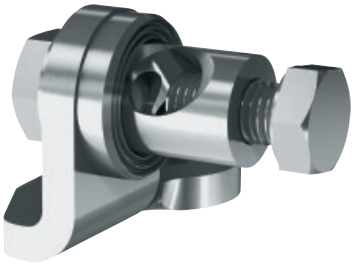

## Applications

- Installing pipes, cable trays and air duct supports in seismic-relevant areas
- Fastening threaded rod seismic bracing to concrete or connecting to MQS-W seismic angles
- Recommended for use in dry, interior environments

## Advantages

- Rapid installation – helps to save time on-site thanks to single-anchor fastening: all you need is the single pre-assembled screw and no additional nuts
- High load capacity – designed for optimal seismic load transfer to the support
- Versatile – load range suitable for a wide range of light- and medium-duty MEP installations
- Engineering support available – contact your local Hilti team for project-specific advice
- Bracing pre-assembly possible – providing additional productivity in seismic support installation

## Technical data

| | |
|---|---|
| **Material composition** | Baseplate: S355MC - DIN EN 10149-2, Pin: 11SMn30+C - DIN EN 10277-3, Threaded washer: 11SMn30+C - DIN EN 10277-3, Hexagon screws: Steel grade 8.8, Washer: Galvanized steel |
| **Surface finish** | Indoor Coated - Electro galvanized |

## MT-S-AP Seismic rod hinge

| Order Designation | Technical data | Sales pack quantity | Item number | |
|---|---|---|---|---|
| **MT-S-AP-8** | Dry indoor conditions (C1) Indoor with temporary condensation (C2) | 10 pc | **2330874** | 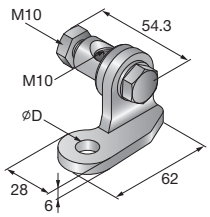  |
| **MT-S-AP-10** | | 10 pc | **2330875** | |
| **MT-S-AP-12** | | 10 pc | **2330876** | |

# MT-S-HR Seismic hinge

**Galvanized seismic hinge for use as a bracing component**

## Applications

- Installing pipes, cable trays and air duct supports in seismic-relevant areas
- Connecting threaded rod and wire seismic bracing to MEP support structures, such as trapeze and suspended pipe rings
- Recommended for use in dry, interior environments

## Advantages

- Retrofittable and adjustable – two-component design can more easily be post-installed to existing pipe/cable supports, with angle markings to make it easier to fix the rod at 45°
- Versatile – load range suitable for a wide range of light- and medium-duty MEP installations
- Engineering support available – contact your local Hilti team for project-specific advice

## Technical data

| | |
|---|---|
| **Material composition** | Connector: S275JR - EN 10025-2,<br>Pin: 11SMnPb37+C - DIN EN 10277-3 |
| **Surface finish** | Indoor Coated - Electro galvanized |

## MT-S-HR Seismic hinge

| Order Designation | Technical data | Sales pack quantity | Item number | |
|---|---|---|---|---|
| **MT-S-HR-8** | Dry indoor conditions (C1) Indoor with temporary condensation (C2) | 10 pc | **2330877** | 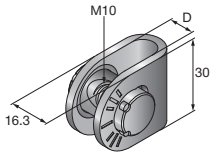  |
| **MT-S-HR-10** | | 10 pc | **2330878** | |

# MT-S-CH Seismic rod hinge

**Galvanized pre-assembled threaded rod brace connector with increased load capacity for mounting to base material**

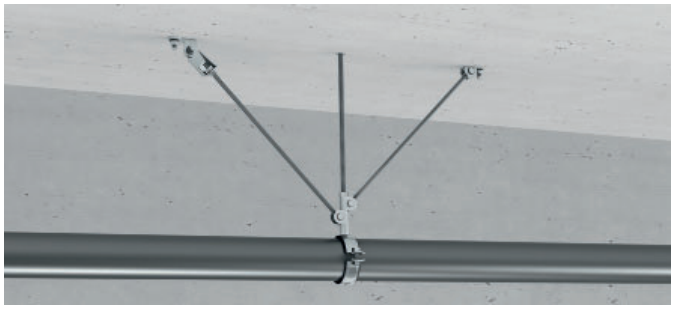

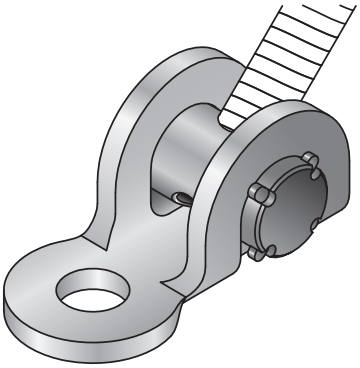

## Applications

- Installing pipes, cable trays and air duct supports in seismic-relevant areas
- Assembling seismic bracing using threaded rods in a wide range of seismic applications

## Advantages

- Easier and quicker to mount to M10 threaded rod
- Maximum installation flexibility due to adjustable angle
- Higher load capacity – engineered for optimal transfer of seismic loads

## Technical data

| | |
|---|---|
| **Material composition** | Connector: S275JR - DIN EN 10025,<br>Pin: 11SMnPb37+C |
| **Surface finish** | Indoor Coated - Electro galvanized |

## MT-S-CH Seismic rod hinge

| Order Designation | Technical data | Sales pack quantity | Item number | |
|---|---|---|---|---|
| **MT-S-CH-10** | Dry indoor conditions (C1) Indoor with temporary condensation (C2) | 10 pc | **2083741** | 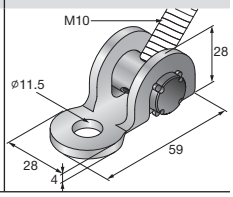  |

9

## MT-S-AP Seismic rod hinge

### Operation instruction

MT-S-AP-8 / MT-S-AP-10 / MT-S-AP-12

2332868-02.2022

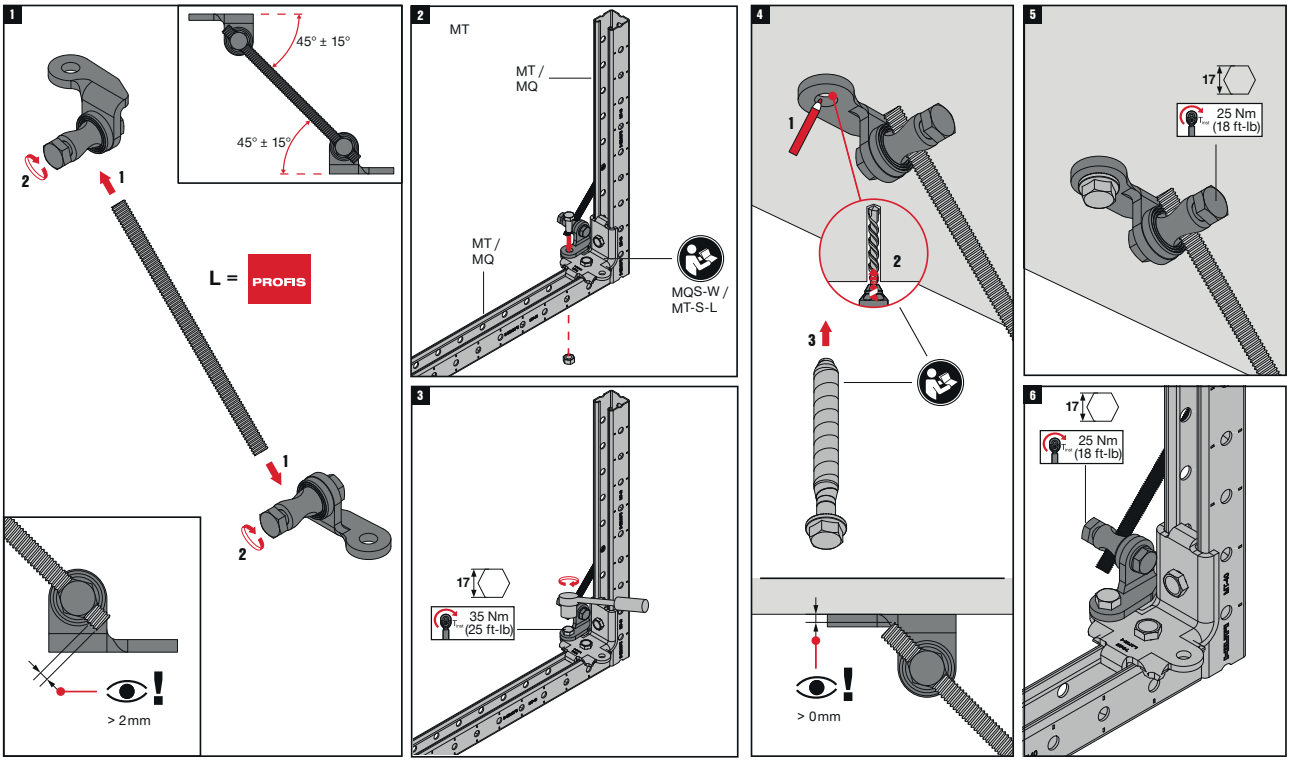


The latest IFU (Instruction For Use) is available on Hilti Online. Please check for any revisions before installing the product.

## MT-S-HR Seismic hinge

### Operation instruction

MT-S-HR-8 / MT-S-HR-10

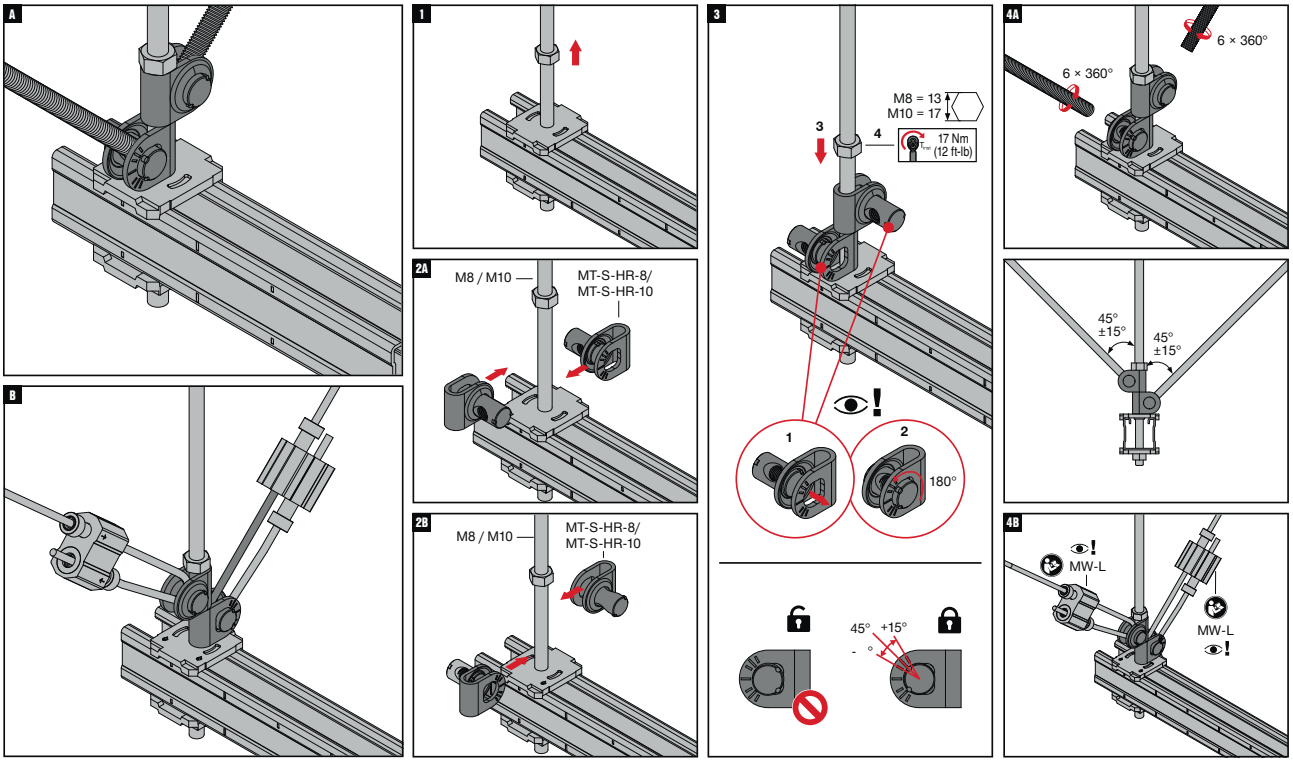


The latest IFU (Instruction For Use) is available on Hilti Online. Please check for any revisions before installing the product.

# MT-S-CH

2087666-12.2021

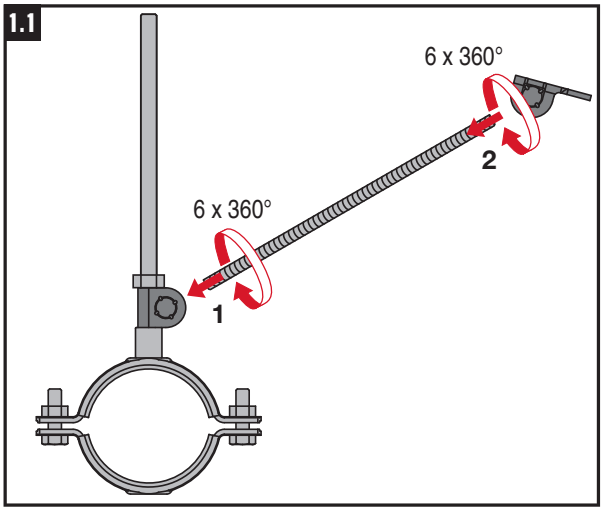


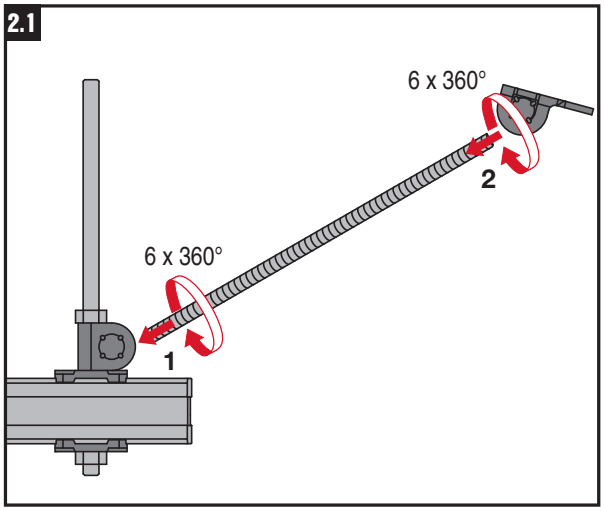


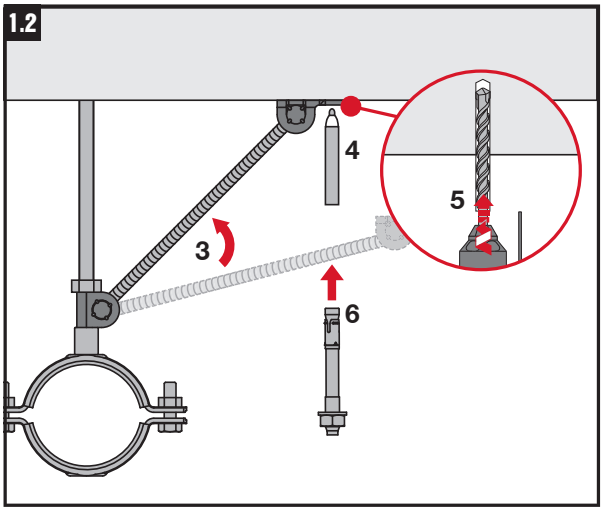


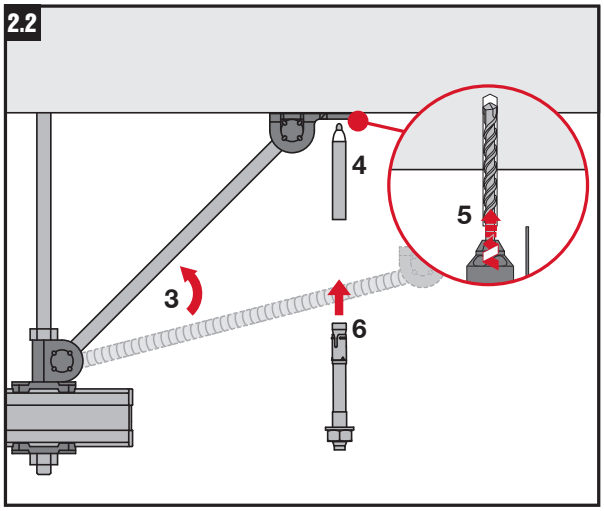


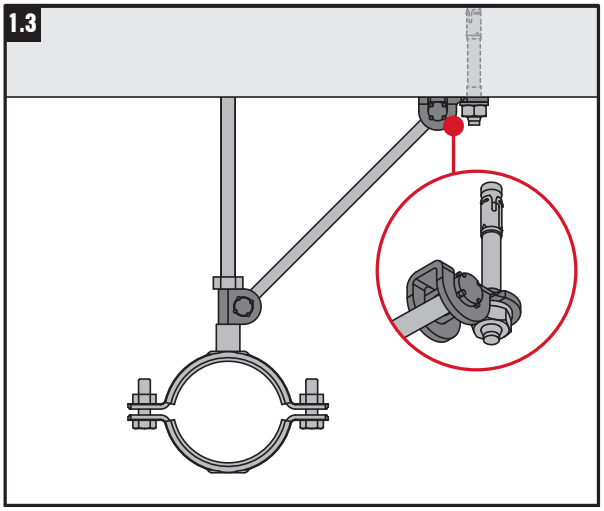


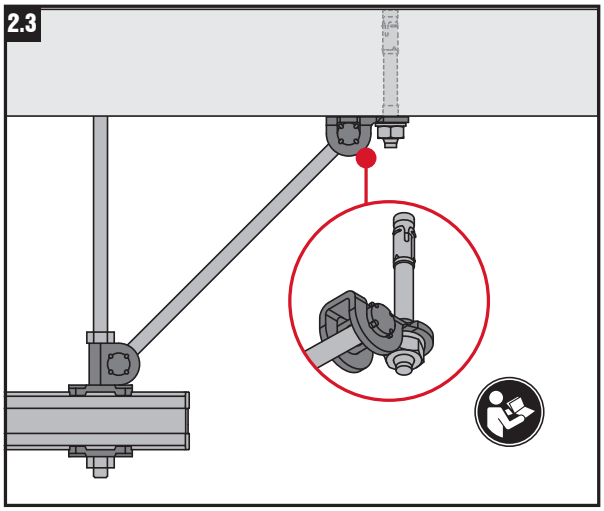


The latest IFU (Instruction For Use) is available on Hilti Online. Please check for any revisions before installing the product.

Hilti Corporation
9494 Schaan Liechtenstein
Tel.: +423-234 2111

www.facebook.com/hiltigroup
**www.hilti.group**